FINAL
Cost and Performance Report for Surfactant-Enhanced DNAPL Removal at Site 88, Marine Corps Base Camp Lejeune, North Carolina

Prepared for

Naval Facilities Engineering Service Center
Port Hueneme, California

By

Battelle
Columbus, Ohio

and

Duke Engineering and Services
Austin, Texas

October 9, 2001

Project Sponsored by

The vendors and products, including the equipment, system components, and other materials identified in this report, are primarily for information purposes only. Although Battelle may have used some of these vendors and products in the past, mention in this report does not constitute Battelle's recommendation for using these vendors or products.

EXECUTIVE SUMMARY

A demonstration of Surfactant-Enhanced Aquifer Remediation (SEAR) was conducted from April to August 1999 at Site 88, at the location of the central dry-cleaning facility (Building 25), Marine Corps Base (MCB) Camp Lejeune, NC. The demonstration included recovery and recycling of surfactant for reinjection during the surfactant flood. Site 88 is contaminated with immiscible-phase tetrachloroethylene (PCE) and Varsol™. The PCE is present as a dense, nonaqueous-phase liquid (DNAPL) beneath Building 25 and its vicinity in a shallow surficial aquifer at a depth of approximately 16 to 20 ft. A significant portion of the DNAPL is present in a low permeability silty layer at the base of the shallow, fine sand aquifer. Varsol™ is present as a light, nonaqueous-phase liquid (LNAPL) in the upper portion of the shallow aquifer, coincident with the water table at about 8 to 10 ft below ground surface (bgs) but was not targeted for remediation. However, some Varsol™ was present as a minor component of the PCE DNAPL and was removed incidentally with the PCE DNAPL.

The SEAR demonstration was funded by the United States Department of Defense (DoD) under the Environmental Security Technology Certification Program (ESTCP) and was led by the Naval Facilities Engineering Service Center (NFESC), Port Hueneme, CA. Additional financial and in-kind contributions were made by the Naval Facilities Engineering Command, Atlantic Division (LANTDIV), and the United States Environmental Protection Agency's (U.S. EPA's) National Risk Management Research Laboratory (NRMRL) Sustainable Technology Division in Cincinnati, OH, and Subsurface Remediation and Protection Division in Ada, OK. This Cost and Performance Report includes a summary of the technical performance of the SEAR technology based on the MCB Camp Lejeune demonstration, and a cost assessment of the demonstration and full-scale SEAR implementation. The surfactant flood was conducted by Duke Engineering and Services (DE&S), with design assistance from the University of Texas (Austin) and field and logistics assistance by Baker Environmental and OHM Remediation Services Corporation. Implementation of the surfactant recovery treatment was conducted by the U.S. EPA's NRMRL in Cincinnati, OH, and by the University of Oklahoma (Norman).

The SEAR demonstration included DNAPL source zone characterization by soil coring and a pre-SEAR partitioning interwell tracer test (PITT), design and synthesis of a custom surfactant, surfactant recovery, and a post-SEAR PITT and soil coring for performance evaluation. The aboveground treatment and recovery systems included DNAPL recovery by gravity separation, separation of the volatile compounds in a pervaporation unit, and reconcentration of surfactants by ultrafiltration for surfactant reinjection and reuse. The belowground system included three injection wells, six extraction wells, two hydraulic control wells, and six multilevel sampling locations. The SEAR demonstration at Camp Lejeune was not intended to treat the entire DNAPL-contaminated zone, but rather the test zone area, which encompassed approximately 25% of the DNAPL zone at Site 88.

A total of 76 gal of PCE was recovered during the demonstration. Post-SEAR soil borings estimated a DNAPL volume of approximately 29 gal remaining in the test zone. The surfactant flood demonstration resulted in the recovery of PCE-DNAPL by enhanced solubilization as well as enhanced recovery due to lowered interfacial tension (IFT). The demonstration proved that surfactant injection can enhance the mobilization and recovery of DNAPL in comparison to conventional pump-and-treat technology, and that mobilized DNAPL can be effectively contained and removed for treatment above ground. The preliminary feasibility of using pervaporation and micellar-enhanced ultrafiltration unit (MEUF) treatment to regenerate the surfactant also was demonstrated; however, further improvements are needed for these technologies to be fully economically viable.

Aquifer heterogeneity, especially the high permeability contrast between the shallower and deeper zones in the aquifer, had a strong influence on the SEAR performance. The poor sweep of the

surfactants across the lower (i.e., basal) portions of the contaminated zone is primarily attributed to the permeability contrast between the shallower, more permeable zone (hydraulic conductivity [K] ~5×10^{-4} cm/sec), and the basal low-permeability zone (K ~10^{-5} cm/sec). The sensitivity of the technology to permeability contrasts indicates the importance of performing a thorough DNAPL source zone characterization, and the need to implement mobility control measures.

Although the basal low-permeability zone was not fully remediated by SEAR, the DNAPL remaining in this zone appears to pose little risk at this site with respect to propagation and transport of the aqueous-phase PCE plume. Prior to the SEAR demonstration, DNAPL that was present in the higher permeability zone was the primary cause of plume propagation and transport at Site 88; however, DNAPL was very effectively removed from this zone by SEAR.

Costs for full-scale application of SEAR were estimated for a heterogeneous low-permeability site (K ~5×10^{-4} to 5×10^{-5} cm/sec [k = 0.5 to 0.05 μm^2]) using the parameters measured during the demonstration at Site 88, MCB Camp Lejeune. These parameters include costs for full DNAPL source zone delineation at the site, assuming that none has been conducted prior to implementing full-scale SEAR for DNAPL removal. Because the cost for DNAPL source zone characterization, performance assessment, and wastewater treatment can vary from site to site with the availability of existing wastewater treatment facilities, costs have been presented separately from SEAR for these aspects. Full-scale estimates include the cost for full source zone characterization, a pilot-scale SEAR test, and wastewater treatment. The resulting full-scale cost estimates are based on the following assumptions: SEAR has not been previously applied to the site, and therefore no earlier DNAPL delineation has been performed, and no wastewater facility preexists at the site. Because the cost of SEAR application is sensitive to the permeability, a cost estimate was also prepared for a heterogeneous high permeability site (K ~1×10^{-2} to 1×10^{-3} cm/sec [k = 10 to 1 μm^2]); all of the Camp Lejeune site parameters, except the permeability, remained the same for the two cost estimates.

The DNAPL zone at Site 88, which can be described as an irregular oval with dimensions of approximately 35 ft by 95 ft, is relatively small, so even at full scale the recovery process resulted in very high treatment costs that would not be representative of costs for a larger-scale site. Therefore, two additional cost estimates were developed to evaluate the economy of scale that can be expected for SEAR when a site with conditions similar to Camp Lejeune is extended to an area of approximately 0.5 acre and 1.0 acre. These cost estimates were developed using the SEAR design for the 35 ft by 95 ft contamination as the basic treatment unit or panel and assuming that the site will be remediated in a panel-by-panel (i.e., one panel at a time) fashion. Because permeability affects the cost of SEAR, parallel scaled-up cost estimates were also performed for a high permeability site at 0.5 acre and 1.0 acre. For these high permeability scenarios, costs were also developed assuming the use of polymer for mobility control to improve the sweep of surfactants through lower permeability zones for comparison to costs without mobility control. Similar scaled-up cost estimates were not developed for the low permeability scenarios because the combination of shallow conditions and low bulk hydraulic conductivities prohibits the use of mobility control measures. Finally, for both the low and high permeability full-scale estimates, the cost benefit of surfactant recovery processes to recover and reuse surfactant was compared to conventional wastewater treatment.

The feasibility of injecting surfactants is strongly dependent on the application of the Underground Injection Control (UIC) regulations, which vary from state to state. Few states have policies that discourage use of injection technologies, and most of those that do require the approval of individual projects. A small number of states have rejected most or all of the proposals they have received for injection projects on policy or technical grounds. Technical merits of the proposed technology, as reflected in a detailed work plan, are the most important factors considered by a state. Almost all states rely on the

terms of the technical proposal, and almost all decisions are made on a case-by-case basis. Several states require a closed system or some other evidence that all of the injectate will be captured and removed, particularly for surfactant injection. Any work plan must provide for comprehensive monitoring of injectate transport and recovery.

The feasibility of surfactant reuse is strongly dependent on site-specific regulations, as contaminant removal to maximum contaminant levels (MCLs) prior to surfactant reinjection is cost-prohibitive. A recently completed surfactant flood at Alameda Point, CA, where surfactant reinjection also was accomplished with contaminants exceeding MCLs (U.S. EPA, 1999; Hasegawa, 1999), indicates that the reinjection of surfactants at MCB Camp Lejeune is not exceptional. As regulatory interpretations allowing the use of injectants have recently become more lenient, it is possible that a similar trend will follow for the reinjection of SEAR process chemicals. The cost benefit of surfactant recovery is strongly site-specific, not only due to the contribution of the aquifer geochemistry on subsurface surfactant recoveries, but also due to the site-specific surfactant formulation, extraction flowrates, and treatment duration that govern the performance and economics of surfactant recovery by the aboveground treatment processes.

ACKNOWLEDGMENTS

Several organizations and individuals cooperated to make this demonstration possible. The United States Department of Defense Environmental Security Technology Certification Program (ESTCP) was instrumental in providing funding for the demonstration. Additional financial and in-kind contributions were made by the Naval Facilities Engineering Command, Atlantic Division (LANTDIV), and the United States Environmental Protection Agency's (U.S. EPA's) National Risk Management Research Laboratory (NRMRL) divisions in Cincinnati, OH, and Ada, OK. The surfactant-enhanced aquifer remediation (SEAR) demonstration project was led by the Naval Facilities Engineering Service Center (NFESC), Port Hueneme, CA, with Laura Yeh serving as project officer and a key technical collaborator. Technical performers included Duke Engineering and Services, the University of Texas (Austin), U.S. EPA's NRMRL, Baker Environmental, the University of Oklahoma (Norman), and OHM Remediation Services Corporation. This Cost and Performance Report was prepared jointly by NFESC (Laura Yeh), Battelle Memorial Institute (Drs. Neeraj Gupta and Larry Smith), and Duke Engineering and Sciences (Fred Holzmer and Carl Young). Dr. Leland Vane (U.S. EPA NRMRL) provided input for the surfactant recovery cost analysis.

CONTENTS

EXECUTIVE SUMMARY iii
FIGURES ix
TABLES ix
ABBREVIATIONS AND ACRONYMS xi

Section 1.0: TECHNOLOGY DESCRIPTION 1
1.1 Introduction 1
1.2 Technology Background 1
1.3 Theory of Operation and Limitations 4
1.4 Specifications 5
1.5 Mobilization, Construction, and Operation Requirements 6
1.6 Key Design Criteria 7
1.7 Advantages and Limitations of SEAR Technology Compared to Competing Technologies 8

Section 2.0: DEMONSTRATION DESIGN 11
2.1 Performance Objectives 11
2.1.1 Subsurface DNAPL Remediation 11
2.1.2 SEAR Effluent Treatment and Surfactant Recovery 11
2.2 Demonstration Site Background 11
2.3 Demonstration Site Characteristics 13
2.4 Physical Setup and Operation 13
2.5 Monitoring Procedures 17
2.6 Analytical Procedures 20

Section 3.0: PERFORMANCE ASSESSMENT 21
3.1 Summary of Field Observations and Data Assessment 21
3.1.1 Subsurface Treatment 21
3.1.2 Aboveground Treatment 25
3.1.3 Post-SEAR Groundwater Monitoring 28
3.2 Discussion of Deviations from the Demonstration Plan 31
3.3 Comparison of Measured Performance to Technology Claims 33

Section 4.0: COST ASSESSMENT 37
4.1 Summary of Treatment Costs 37
4.2 Scale-Up Recommendations 37
4.2.1 Concepts for Full-Scale Applications 38
4.2.2 Cost Projections for Full-Scale Applications 43
4.2.2.1 Conventional Wastewater Treatment 45
4.2.2.2 Surfactant Recovery and Reuse 48
4.2.2.3 Discussion of PITT Costs (Optional) 51
4.2.3 Technology Cost Comparison 54

Section 5.0: IMPLEMENTATION ISSUES 56
5.1 Cost Observations 56
5.2 Performance Observations and Lessons Learned 57
5.3 Regulatory Issues 61

CONTENTS
(Continued)

Section 6.0: REFERENCES 63
6.1 Key References 63
6.2 General References 63
6.3 Associated DoD Contracts and Their Locations 65

APPENDIX A: POINTS OF CONTACT A-1
APPENDIX B: DETAILS OF ESTIMATED FULL-SCALE COSTS B-1
APPENDIX C: DETAILS OF SURFACTANT RECOVERY SYSTEM COST ANALYSIS C-1
APPENDIX D: ALTERNATIVE TECHNOLOGY COSTS FOR DNAPL SOURCE REMEDIATION AT SITE 88, MARINE CORPS BASE CAMP LEJEUNE D-1

FIGURES

Figure 1-1. Conceptual Picture of SEAR 2
Figure 1-2. Flowchart for the SEAR Demonstration at Site 88, MCB Camp Lejeune 3
Figure 2-1. Dissolved PCE Plume Boundary in the Shallow Aquifer (August 1996) 12
Figure 2-2. Generalized Geosystem Cross Section of DNAPL Zone at Site 88, MCB Camp Lejeune 14
Figure 2-3. Demonstration Well Array and MLS Sampling Locations 15
Figure 2-4. SEAR Demonstration Area at Building 25 and Test System Layout 18
Figure 2-5. Layout of Surfactant Recovery Process Equipment 19
Figure 3-1. History of PCE Concentrations in Extraction Wells EX01, EX02, and EX03 22
Figure 3-2. Surfactant and IPA Results at MLS-4T and MLS-4B 23
Figure 3-3. Fraction of PCE Removed by Pervaporation Unit 26
Figure 3-4. History of PCE Concentration at Extraction Well EX04R 34
Figure 3-5. Normalized Effluent Concentration History of IPA and Surfactant at Extraction Well EX01 36
Figure 4-1. Proposed Well Arrangement for Full-Scale SEAR Remediation (Low Permeability Condition) 40
Figure 4-2. Proposed Well Arrangement for Full-Scale SEAR Remediation (High Permeability Condition, One Panel) 41
Figure 4-3. Conceptual Diagram of Full-Scale SEAR Using Conventional Wastewater Treatment 44
Figure 4-4. Conceptual Diagram of Full-Scale SEAR System with Surfactant Recovery 49

TABLES

Table 1-1. Key Design Criteria for SEAR 8
Table 1-2. SEAR Advantages and Limitations 10
Table 1-3. Factors Influencing SEAR Cost & Performance 10
Table 2-1. Camp Lejeune Surfactant Formulation 16
Table 2-2. Mass of Surfactant Formulation Chemicals Injected 16
Table 2-3. Analytical Methods 20
Table 3-1. Comparison of Pervaporation and MEUF Product Streams 27
Table 3-2. Composition of Recycled Surfactant Injected 28
Table 3-3. Post-SEAR Groundwater Monitoring Results May 2000 Sampling Event 29
Table 3-4. Post-SEAR Groundwater Monitoring Results February 2001 Sampling Event 29
Table 3-5. VOC Concentration Trends at Selected Site 88 Long-Term Monitoring (LTM) Locations 30
Table 3-6. Free-Phase DNAPL Interface Measurements 31
Table 3-7. Changes in DNAPL Interface Elevations 32
Table 3-8. Flowrates During the Surfactant Flood and Post-SEAR Water Flood and PITT 32
Table 4-1. Demonstration Conditions at Site 88, MCB Camp Lejeune 37
Table 4-2. Costs Incurred for SEAR Treatment Activity During the ESTCP Demonstration at Site 88, MCB Camp Lejeune 38
Table 4-3. Required Phases and Durations for Full-Scale SEAR Application under Low Permeability (k) or High Permeability (k) Conditions at a Site Similar to Site 88, MCB Camp Lejeune 42
Table 4-4. Optional Phases for Full-Scale SEAR Application at a Site Similar to Site 88, MCB Camp Lejeune 43

Table 4-5. Projected Cost of a Full-Scale SEAR System for a Site Similar to Site 88, MCB Camp Lejeune 46
Table 4-6. Projected Cost of a Full-Scale SEAR System for a High Permeability Site With All Other Parameters Similar to Site 88, MCB Camp Lejeune 47
Table 4-7. Cost of Conventional Wastewater Treatment for Full-Scale DNAPL Remediation at a Site with Parameters Similar to Site 88, MCB Camp Lejeune 48
Table 4-8. Comparison of Flooding Durations for Full-Scale SEAR Application under Low Permeability or High Permeability Conditions at a Site Similar to Site 88, MCB Camp Lejeune, NC 48
Table 4-9. Criteria Used to Develop Surfactant Recovery Costs 52
Table 4-10. Cost and Savings Estimates for Surfactant Recovery at a Site with Parameters Similar to Site 88, MCB Camp Lejeune 53
Table 4-11. Projected Cost for PITT 54
Table 4-12. Summary of Costs for SEAR and Alternative Technologies for Full-Scale Remediation of the DNAPL Source Zone at Site 88, MCB Camp Lejeune 55
Table 6-1. Summary of Contracts and Purchase Orders 65
Table 6-2. Contracting Offices 66

ABBREVIATIONS AND ACRONYMS

bgs	below ground surface
CERCLA	Comprehensive Environmental Response, Compensation, and Liability Act
CITT	conservative interwell tracer test
cmc	critical micelle concentration
DE&S	Duke Engineering and Services
DNAPL	dense, nonaqueous-phase liquid
DoD	United States Department of Defense
ESTCP	Environmental Security Technology Certification Program
EX	extraction well
gpm	gallons per minute
GC/MS	gas chromatography/mass spectrometry
HC	hydraulic control well
ID	identification
IFT	interfacial tension
IN	injection well
IPA	isopropyl alcohol
IWTP	industrial wastewater treatment plant
k	permeability
K	hydraulic conductivity
LANTDIV	Atlantic Division, Naval Facilities Engineering Command
MCB	Marine Corps Base
MCL	maximum contaminant level
MEUF	micellar-enhanced ultrafiltration unit
MLS	multilevel sampler
MPPE	macroporous polymer extraction
MW	monitoring well
MWR	Morale, Welfare, and Recreation
NAPL	nonaqueous-phase liquid
NFESC	Naval Facilities Engineering Service Center
NRMRL	National Risk Management Research Laboratory
O&M	operating & maintenance
P&T	pump-and-treat
PCB	polychlorinated biphenyl
PCE	tetrachloroethylene
PITT	partitioning interwell tracer test
POTW	publicly owned treatment works

PV	present value, pore volume
RCRA	Resource Conservation and Recovery Act
SCADA	supervisory control and data acquisition system
SDWA	Safe Drinking Water Act
SEAR	surfactant-enhanced aquifer remediation
TCA	trichloroethane
TW	temporary well
UF	ultrafiltration
UIC	underground injection control
USDW	underground source of drinking water
U.S. EPA	United States Environmental Protection Agency
VOC	volatile organic compound
wt%	percent by weight

Section 1.0: TECHNOLOGY DESCRIPTION

1.1 Introduction

A demonstration of Surfactant-Enhanced Aquifer Remediation (SEAR) was conducted from April to August 1999 at Site 88, at the location of the central dry-cleaning facility (Building 25), Marine Corps Base (MCB) Camp Lejeune, NC. The demonstration included recovery and recycling of surfactant for reinjection during the surfactant flood. The SEAR demonstration was funded by the United States Department of Defense (DoD) under the Environmental Security Technology Certification Program (ESTCP) and was led by the Naval Facilities Engineering Service Center (NFESC), Port Hueneme, CA. The Naval Facilities Engineering Command, Atlantic Division (LANTDIV), also contributed substantial funding and logistical support for the dense, nonaqueous-phase liquid (DNAPL) source zone characterization and SEAR demonstration, including provision of utilities and wastewater treatment. The United States Environmental Protection Agency's (U.S. EPA's) National Risk Management Research Laboratory (NRMRL) division in Cincinnati, OH, provided in-kind support for pervaporation unit operation and testing; and the NRMRL division in Ada, OK, provided assistance with DNAPL source zone characterization and performance assessment. This report summarizes the technical performance of the SEAR technology based on the MCB Camp Lejeune demonstration, and a cost assessment of the demonstration and full-scale SEAR implementation. The details of the design, implementation, and technical performance assessment of the SEAR demonstration are presented in the SEAR Final Report (Duke Engineering and Services [DE&S], 2000).

1.2 Technology Background

Surfactants are surface active agents that have two different chemically active parts, a hydrophilic head and a hydrophobic tail. Thus, they exhibit solubility in both water and oil. It is this unique property that allows these agents to greatly increase the solubility of nonaqueous-phase liquids (NAPLs) in water for NAPL removal by enhanced solubilization, and also to greatly reduce the interfacial tension (IFT) between the NAPL and water phases for NAPL removal by enhanced mobilization. SEAR involves the injection of a surfactant solution consisting of surfactant, electrolyte, cosolvent (i.e., alcohol), and water. Surfactant flooding is followed by water flooding to remove injected chemicals and solubilized or mobilized contaminants remaining in the aquifer. The extracted fluids are treated aboveground to separate the DNAPL-phase and dissolved-phase contaminants for disposal. The surfactants can be recovered for reinjection if desired. A conceptual illustration of the SEAR process is shown in Figure 1-1. A flowchart showing the SEAR components for the MCB Camp Lejeune demonstration is presented in Figure 1-2. It should be noted that not all the components shown in Figure 1-2 would be used at every site. For example, an alternative scheme, discussed in Section 4.2, may be used if surfactant recovery and reuse are not desired.

When designing a surfactant flood, surfactants are screened for acceptable toxicity and biodegradation characteristics, and minimal sorption to the aquifer mineral surfaces. In most aquifers, mineral surfaces are negatively charged; thus, anionic surfactants are selected because they are composed of negatively charged water-soluble heads, which exhibit minimal sorption. The solubilization as well as the IFT reduction capacity of most anionic surfactants are sensitive to the electrolyte concentration. Therefore, anionic surfactants are studied over a wide range of salinities to determine the appropriate electrolyte concentration for phase stability and NAPL solubilization.

If the hydrogeology permits the use of a low-IFT surfactant system, the salinity is adjusted to achieve ultralow IFTs. Ultralow IFTs are achieved when the surfactants form a three-phase system (Winsor Type III), which contains excess water and NAPL as well as a separate middle phase with a large

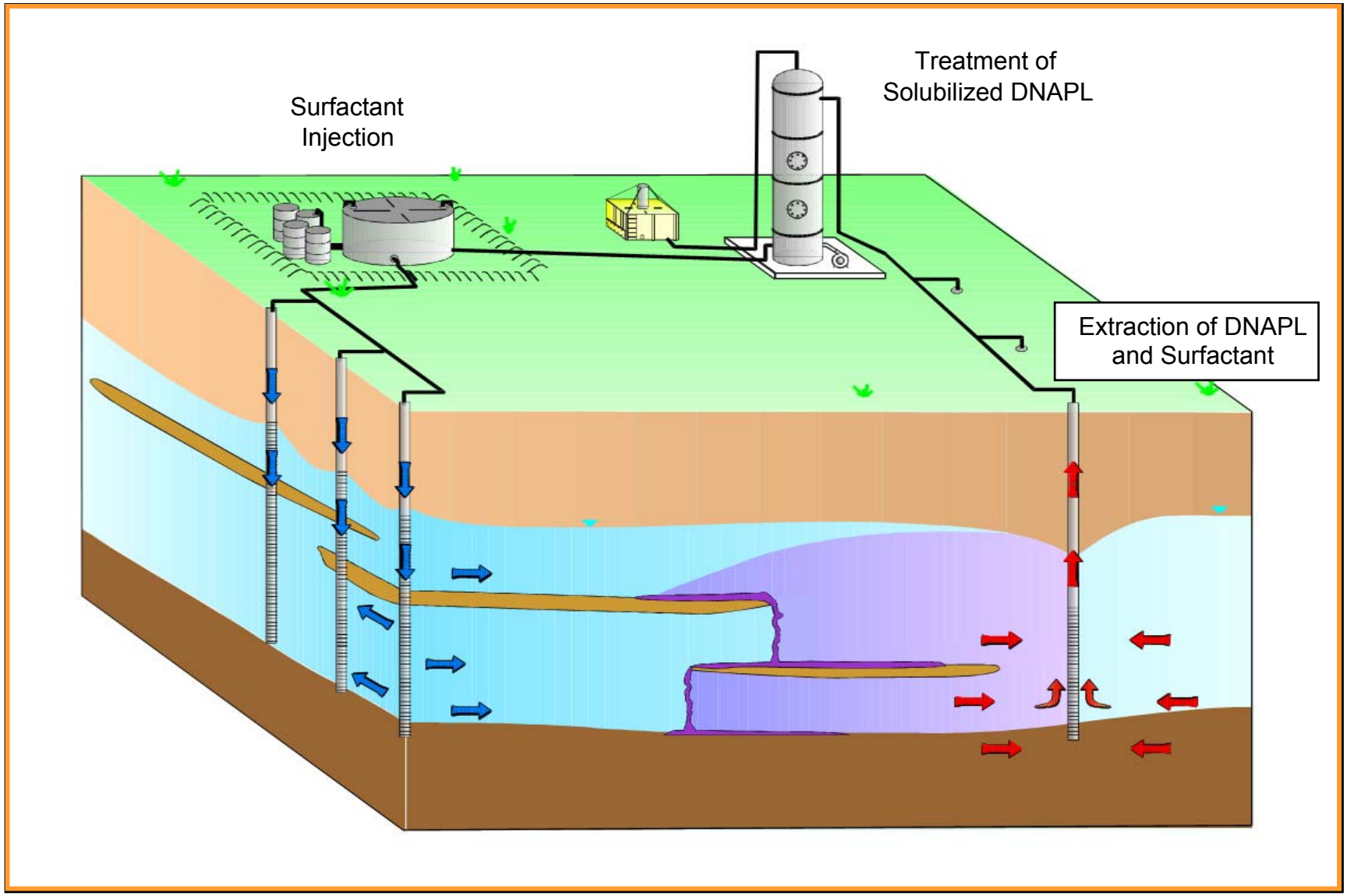

Figure 1-1. Conceptual Picture of SEAR

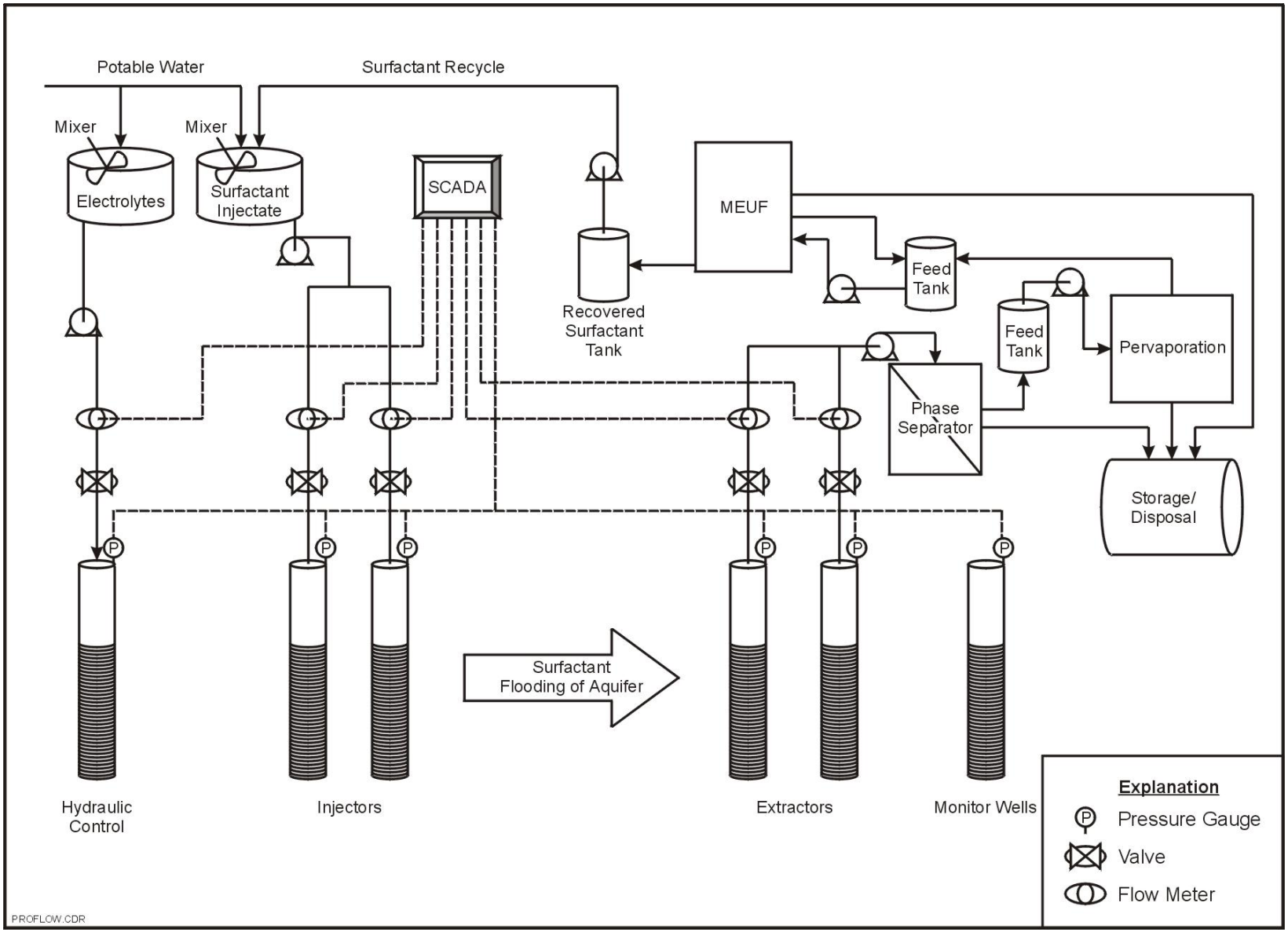

Figure 1-2. Flowchart for the SEAR Demonstration at Site 88, MCB Camp Lejeune

fraction of solubilized NAPL. Because not all surfactants can form Winsor Type III systems, the ability to achieve ultralow IFT may become an additional surfactant selection criteria. An ultralow IFT system that will result in DNAPL mobilization should not be used if the site does not have an adequate geologic barrier to prevent downward DNAPL migration; instead, a solubilization system that minimizes the lowering of IFT should be designed. Typically, solubilization systems exhibit Winsor Type I behavior. However, it is also true that low-IFT Winsor Type III systems generally can achieve a much greater solubilization of NAPL, which is more economical; if carefully designed, DNAPL mobilization risks can be mitigated, although not completely eliminated.

Cosolvent is used to improve the solubility of surfactant in water, so that the resulting surfactant-NAPL solution (microemulsion) has an acceptable viscosity (<10 centipoise). High microemulsion viscosities can indicate the formation of surfactant precipitates that will cause pore plugging. The addition of cosolvent also influences the surfactant phase behavior, and its impacts must be examined under a range of system salinities. After surfactants have been evaluated for phase behavior with the site NAPL, soil column studies are performed to evaluate surfactant performance with contaminated site soils. During soil column testing, the difference in pressures between the inlet and outlet of the column is monitored to ensure that there is no pore plugging by surfactant due to the formation of liquid crystals or gels, and/or by ion exchange that mobilizes clay fines. Initial and final DNAPL saturations are measured in the soil column to estimate the mass of DNAPL removed by the surfactant solution and postsurfactant water flooding. The volume of DNAPL mobilized by the surfactant solution, if any, is noted.

The SEAR technology is potentially applicable to any type of NAPL that is located in the saturated subsurface. It has been applied to the removal of various chlorinated solvents, creosote, gasoline, jet fuels, and polychlorinated biphenyls (PCBs) (Lowe et al., 1999b). Perhaps the greatest demand for the technology is for the remediation of chlorinated hydrocarbon DNAPLs. This demand is due to the prevalence of these DNAPLs as contaminants, the risk associated with their presence in the subsurface, and the poor performance of conventional remedial technologies that have been developed primarily to remove dissolved-phase contamination.

1.3 Theory of Operation and Limitations

Implementation of SEAR requires the delivery of surfactant to the DNAPL zone via injection wells and the subsequent flow of surfactant through the DNAPL zone, followed by the recovery of surfactant and solubilized DNAPL via extraction wells. The volume of aquifer that is contacted by surfactant as it flows through the subsurface is termed “swept pore volume.” The DNAPL zone must be carefully characterized prior to SEAR activities in order to develop a cost-effective SEAR design (e.g., delineating the extent of the DNAPL zone in order to design the surfactant flood to target the appropriate swept pore volume).

Design simulations must be conducted to optimize the flow of surfactant through the DNAPL zone. A properly designed surfactant flood includes hydraulic control to direct the flow of surfactant through the DNAPL zone and to capture the surfactant injectate and solubilized DNAPL at the extraction wells. This control is important not only to use chemicals efficiently, but also to minimize the risk of uncontrolled DNAPL migration beyond the treatment zone. Hydraulic control is implemented through the combination of well placement and flowrates of injection, extraction, and hydraulic control wells. A properly implemented hydraulic control flow system captures the injected fluids and removes DNAPL; such a forced-gradient flow system also focuses the flow of injectate for a more effective sweep through the targeted DNAPL zones.

The primary limitations that affect the cost and performance of SEAR are related to the intrinsic permeability (k) and/or the permeability contrast (i.e., degree of heterogeneity) that is present in

the DNAPL zone. To solubilize DNAPL with surfactants, a sufficient mass of surfactant must sweep through the DNAPL zone in order to remediate the aquifer. If the bulk permeability is too low, then surfactant cannot be injected and extracted cost-effectively. However, it is difficult to make a general rule of thumb to define the lower permeability limit for the application of surfactants. This is because groundwater velocity (simplified as $v = Ki$) is directly proportional to both hydraulic conductivity (K) and hydraulic gradient (i), which means that both the permeability and the maximum potential hydraulic gradient must be evaluated on a site-specific basis. In a shallow, unconfined aquifer such as the one at Site 88, permeability is more limiting than at a deeper site because a shallow site has a narrower range of hydraulic gradients to be considered for the SEAR design than a design for a deeper site. Also, if a significant permeability contrast is present in the DNAPL zone, it will increase the duration of the surfactant flood to clean the low-permeability zones. In many cases, where the bulk permeability is sufficiently high, polymer or foam may be used as a means of mobility control to vastly improve the sweep of surfactants through the lower-permeability zones. During the ESTCP demonstration, mobility control was not used due to the limitations presented by the shallow low permeability site conditions, as well as the emphasis on obtaining a low critical micelle concentration (cmc) surfactant to accomplish surfactant recovery objectives. A surfactant flood designed specifically for mobility control would focus either on a well-foaming surfactant used in a formulation free of cosolvent (due to the antifoaming properties of alcohol cosolvents) or surfactant compatibility with polymer. A general rule of thumb can be made with respect to the effects of permeability and heterogeneity upon the costs of SEAR: as permeability decreases and/or the degree of heterogeneity increases, the duration of SEAR increases, which also increases the unit cost of SEAR. This general rule is also applicable to the effects on unit costs and duration for all other remedial technologies as well.

SEAR effluent treatment is complicated primarily by the presence of surfactant, which may cause a foaming problem if vapor-liquid stripping processes are employed, and reduces contaminant removal efficiency due to partitioning of contaminant into the surfactant aggregates. Application of conventional processes, such as air stripping or steam stripping, may necessitate the addition of antifoam agents or other significant operational changes in order to control surfactant foaming. The combination of reduced contaminant removal efficiency and higher contaminant loading, resulting from the solubilization capacity of the surfactant solution, must be considered when designing an appropriate treatment process. In addition, if alcohol is present in the surfactant formulation, then alcohol removal may be required prior to discharging the SEAR effluent to a publicly owned treatment works (POTW) or industrial wastewater treatment plant (IWTP). Due to the high solubility of most alcohols in water, and the resulting low vapor-liquid partitioning of these compounds, alcohol removal will typically require a process that is separate from the contaminant removal process.

When on-site facilities are not available for processing the SEAR effluent, the expense of SEAR effluent treatment favors examination of treatment processes that can recycle SEAR chemicals. In this ESTCP demonstration, the recovery and reuse of surfactants was examined. The use of pervaporation as the contaminant removal step avoided the surfactant foaming problem without the addition of antifoam agents, which assisted the recyclability of the surfactant. Pervaporation effluent was sent to an ultrafiltration (UF) unit to remove excess water from the surfactant prior to reinjection. Alcohol recovery was not a demonstration objective; however, it was tested on a small-scale using a second set of pervaporation membranes (Appendix H of the SEAR Final Report, DE&S, 2000).

1.4 Specifications

The SEAR design specifications include the surfactant design formulation, number of wells and the well field configuration, flowrates, and the duration of all phases of operation (e.g., prewater flood, surfactant flood, and postwater flood). The specifications depend on factors such as the surfactant selection process, remedial design characterization that leads to a conceptual site model (or geosystem

model), design simulations using the geosystem model to optimize the sweep of surfactants and to minimize the chemical requirement, and the scale of the remediation project.

Wells are the means by which surfactant is delivered to the subsurface and by which DNAPL is removed. Properly designed and installed wells are crucial to the success of a SEAR project. Poorly performing wells may not allow the implementation of design flowrates. SEAR performance is highly dependent on the performance of the wells to achieve an efficient sweep of surfactants through the DNAPL zone, so the use of inefficient wells generally will reduce remediation performance. Because well installation is such a routine, conventional process, it is often overlooked as a performance factor. Because of this, wells are likely the most underrated component of the SEAR system. Wells must be screened across the appropriate depth intervals in terms of screen length and placement. Also, it is very important to fully develop the wells to maximize the efficiency (i.e., productivity) of all performance wells. Highly efficient wells are required for injection, extraction, and hydraulic control. Wells used for sampling or monitoring, however, do not need to be highly efficient, although screen placement is still crucial to obtaining representative data for SEAR performance assessment.

SEAR operations should be electronically monitored and controlled with a supervisory control and data acquisition (SCADA) system. The SCADA system provides continuous control, monitoring, and alarms to notify the SEAR operators when certain parameters (e.g., injection or extraction flowrates) deviate from design specifications. The SCADA system also reduces operating costs by allowing unstaffed operations overnight, and improves remediation performance by alerting the operator to out-of-spec conditions as they occur. The SCADA system can be designed and constructed using conventional off-the-shelf components, such as flow control valves and meters, and autosample collectors. The train of components is coordinated with system software that must be customized for each project to address the site-specific number of such items as injection wells, extraction wells, and sampling intervals. The SCADA system, control valves, and flowmeters are typically housed inside a trailer, which is collectively referred to as the control trailer.

The design of the SEAR effluent treatment process depends on the treatment objectives (disposal or chemical recycling), DNAPL composition, and flowrate. The treatment standards will be dictated by the discharge limits or reinjection standards and will vary from site to site; at some sites, the standards imposed for the injected fluid may be too stringent to make surfactant reuse economical. Surfactant recycling generally requires the use of a contaminant removal process that avoids the addition of an antifoam agent, as well as a second step to concentrate surfactant. Pervaporation and liquid-liquid extraction (or absorption) meet the demands of the first step. Air stripping may be a viable option for volatile contaminant removal, if it can be performed without the addition of antifoam chemicals. Ultrafiltration and nanofiltration are currently the only commercially available technologies that can accomplish the recovery of surfactants. If disposal of SEAR effluent is intended, a more conventional process (such as air stripping or steam stripping) that will either require the use of an antifoam agent or significant operational changes in order to control surfactant foaming can be used for contaminant removal. If alcohol is used in the surfactant formulation, an additional treatment process may be necessary. Air stripping, liquid-liquid extraction, and pervaporation are among the potential candidates. However, because of the additional wastewater treatment costs incurred, the most cost-effective solution is to minimize or avoid the use of alcohol in the surfactant formulation whenever possible.

1.5 Mobilization, Construction, and Operation Requirements

Before mobilizing to the field site, appropriate preparation must be taken to increase the efficiency of operations upon arrival. Arrangements need to be made in advance for the provision of all necessary utilities (e.g., sufficient electrical power, potable water, and restroom facilities), as well as wastewater disposal options. Ordering supplies such as chemicals, equipment (e.g., pumps and tubing),

and other miscellaneous supplies (e.g., health and safety and sampling supplies) must be completed in advance to coordinate the delivery of supplies on site following the arrival of the field crew but before the supplies are needed. Advance consideration also must be given for rental of an appropriate office trailer and any issues associated with delivery and setup of the office trailer and the control trailer (e.g., accessibility to the site such as paved roads or muddy site conditions). Chemical storage areas must be approved by the appropriate authorities on site prior to delivery of chemicals. All chemicals should be properly labeled with standard safety information placards, and some chemicals may require secondary containment or grounding. Material Safety Data Sheets for chemicals should be procured and stored on file.

Premobilization activities for the MCB Camp Lejeune SEAR demonstration also included modifications to the control trailer in order to update the electronic capabilities for monitoring flowrates, as well as the autocollector system used for sampling the extraction wells during the post-SEAR partitioning interwell tracer test (PITT). Control system modifications will always be necessary before mobilizing to any new SEAR site in order to accommodate site-specific requirements (e.g., number of injection and extraction flow controls and flowmeters, appropriate piping to accommodate the design flowrates, and the number of sampling points). In addition to the physical modifications required, the control software must be modified to operate the new SEAR system components. All such modifications are most efficiently implemented, if done before mobilizing to the field.

Once the control trailer is ready for field operation and all other premobilization preparation is completed, the control trailer may be hauled to the site by SEAR contractor personnel or by a contracted commercial shipping company. Generally, it is more cost-effective to contract a commercial shipping company to deliver the control trailer to the site.

If on-site facilities are not available to treat the SEAR effluent, then wastewater treatment equipment also must be mobilized to the site. For small-scale SEAR operations (e.g., <20 gal per minute [gpm]), trailer or skid-mounted equipment may be leased for wastewater treatment. For larger-scale demonstrations, the construction of more permanent treatment facilities may be required.

1.6 Key Design Criteria

The successful implementation of SEAR requires that several key design criteria be fulfilled. The design criteria are divided between the source zone characterization, surfactant selection and geosystems model development/numerical modeling phases and are summarized in Table 1-1. Source zone characterization seeks to establish whether SEAR would be an appropriate NAPL removal technology at a given site and, if so, the type of SEAR design that is most appropriate. Design considerations include whether NAPL mobilization or solubilization would be the preferred means for effecting remediation and whether mobility control measures will be used. The surfactant selection phase seeks to identify an optimum surfactant, cosolvent (as needed), and electrolyte formulation with acceptable phase behavior. The surfactants identified should be insensitive to precise electrolyte concentrations and should exhibit high NAPL recoveries in soil column experiments with minimal pressure drops due to pore plugging. If surfactant reuse is desired, the surfactants selected also should exhibit good treatability characteristics in terms of filtration and aboveground treatment. Finally, the geosystems model development/numerical simulations phase should maximize hydraulic containment of the injectate fluids, determine optimum injection and extraction flowrates, determine the effect of heterogeneities on the response of surfactants and solubilized contaminant, determine the mass of surfactant required and finally, determine the duration of surfactant and postsurfactant water flooding.

Table 1-1. Key Design Criteria for SEAR

Design Phase	Key Design Questions
I. Source zone characterization	• Is there any NAPL at the site? • Where is the NAPL located, and what is its approximate volume and extent? • Is the hydraulic conductivity (K) of the aquifer sufficient for the depth of the aquifer and saturated thickness? • Is the aquifer a layered system with a high-permeability contrast between various layers? • Is there a good capillary barrier to downward NAPL migration at the site?
II. Surfactant selection	At groundwater temperature and pH: • Is the surfactant acceptable (e.g., biodegradable) for injection into the aquifer? • Are the surfactant characteristics acceptable for performing enhanced solubilization (Winsor Type I) or mobilization (Winsor Type III), depending on remedial objectives? • Does the surfactant-electrolyte-NAPL system reach equilibrium rapidly (with a stable surfactant phase forming within several hours to 24 hours depending on the anticipated residence time in the aquifer)? • Is the salinity requirement of the system acceptable (because of impurities associated with the bulk salt)? • Is the required cosolvent concentration economically acceptable? • If surfactant regeneration is desired, does the surfactant have the necessary characteristics for filtration? • Do soil column test results confirm that surfactants are as effective in removing NAPL from site soils as predicted from phase behavior testing? • Is there any pressure increase observed during soil column testing (i.e., surfactant sorption and/or pore plugging)?
III. Geosystems model development/ Numerical simulations	• Is hydraulic containment being accomplished? • Have subsurface heterogeneities (i.e., variations in aquifer conductivity and DNAPL distribution) been taken into account? • How many pore volumes of surfactant solution are required to remove the desired quantity of NAPL? • Is the duration of water flooding sufficient to accomplish acceptable recovery of injected surfactants and cosolvent (as determined by regulatory requirements)?

1.7 Advantages and Limitations of SEAR Technology Compared to Competing Technologies

The strengths of the SEAR technology lie in its ability to accomplish NAPL removal quickly and effectively compared to conventional methods for addressing a dissolved-phase plume, such as pump and treat (P&T) and biodegradation/natural attenuation. Surfactants with high solubilizing capacity (e.g., increases of two to three orders of magnitude in aqueous solubility are quite common), suitable viscosity for injection, and low sorption to aquifer materials are available for a wide variety of chlorinated and nonchlorinated NAPLs. The advantage of SEAR is its ability to overcome the mass transfer limitations that are intrinsic to subsurface NAPL contamination, particularly in the saturated zone. For example, in situ chemical oxidation can only take place in an electrolyte such as groundwater and not in the NAPL itself, which is a nonelectrolyte and cannot transfer electrons easily. Due to the slow dissolution of NAPL, the progress of NAPL destruction is very slow indeed. In situ thermal technologies still need to address the issue of adequately contacting the heat with the NAPL and may require aquifer dewatering. Thus, these competing alternatives are less efficient than SEAR at NAPL removal, particularly when high NAPL saturations exist. The use of oxidants in situ is not applicable to saturated organic contaminants such as trichloroethane (TCA), and also may require monitoring of heat evolution, particularly in the

presence of underground utilities. Finally, a properly designed surfactant flood, with hydraulic control, imposes a forced hydraulic gradient across the treatment area for a focused sweep of surfactant through the DNAPL zone. Such a flow system has a greater capability of sweeping heterogeneous zones than remedial technologies that use "passive" injection (i.e., injection without extraction to direct the flow of chemicals, such as chemical oxidation). Surfactant flooding also has been shown in a number of field trials to be consistently more efficient in DNAPL removal than cosolvent flooding, and can accomplish these higher DNAPL removal efficiencies with fewer pore volumes of flooding agent.

Although biological methods most commonly applied to soils with low-level soil and groundwater concentrations are often promoted for NAPL remediation, these methods may be limited by the toxicity of the NAPL and can only be applied to removing contaminants in the dissolved phase due to their nutrient requirements. Furthermore, they are inherently much slower acting than the more aggressive abiotic remedial technologies.

SEAR technology requires more extensive source-zone characterization in comparison to conventional dissolved-phase remedial technologies due to the higher liability associated with potential undesired mobilization of NAPL. All aggressive NAPL remediation technologies require greater source zone characterization to ensure safe technology design and cost-effective performance. However, improved source zone characterization is beneficial for any remedial design technology. Careful design and execution of a SEAR test is required to ensure hydraulic containment and to prevent undesired mobilization of NAPL. Once again, additional costs are associated with this requirement in comparison to less aggressive remediation technologies that address dissolved-phase contamination. Finally, the high cost of SEAR is also due in part to surface treatment costs of extracted wastes containing surfactant (e.g., with in situ oxidation, contaminants are destroyed in place rather than extracted and treated); the availability of on-site treatment facilities will influence surface treatment costs. The cost of waste treatment is one of the reasons surfactant recycling was examined for this ESTCP project.

In consideration of technical limitations, SEAR may be applied at any site with NAPL contamination in the saturated zone where hydraulic control of injected chemicals can be maintained, and where the aquifer is sufficiently permeable. At shallow sites (up to 25 ft deep) with a saturated thickness of approximately 10 ft, it appears that the lower permeability limit is on the order of 10^{-4} cm/sec. At greater aquifer depths, and greater saturated thickness, the permeability limit for SEAR will be lower. As the permeability of soils decreases, the selection criteria for surfactants becomes more stringent and the expertise required in test design also increases. The ESTCP-sponsored SEAR demonstration at MCB Camp Lejeune has addressed the current practical lower limit of permeability for SEAR application in shallow groundwater aquifers where strong permeability contrasts exist. This is due to site limitations on the use of mobility control measures to improve the sweep of surfactants through lower permeability zones of heterogeneous aquifers. Table 1-2 summarizes the advantages and limitations associated with SEAR application.

The most economical application of SEAR is at a relatively homogeneous and permeable ($K \geq 10^{-3}$ cm/sec) site, although implementation of SEAR with mobility control will improve both the cost and performance of SEAR across a broader range of site conditions. The issue of remediation cost must be evaluated on a site-by-site basis against the human health and ecological risks associated with the contamination remaining in the subsurface. It is expected that the costs of technology application will decrease with continuing technology advancements in SEAR design and NAPL source zone characterization, as well as broad dissemination of a well-written technology protocol. Table 1-3 summarizes the primary factors that influence SEAR cost and performance.

Table 1-2. SEAR Advantages and Limitations

Advantages	Limitations
1. Can address a wide variety of NAPL contaminants	1. Requires extensive source-zone characterization compared to dissolved-phase technologies
2. Overcome mass transfer limitations of dissolved-phase technologies such as P&T and in situ chemical oxidation by accomplishing: a) Orders of magnitude increase in contaminant solubility b) Low interfacial tensions to mobilize contaminant c) Efficient contacting of contaminated zones using forced hydraulic gradients via the use of a series of injection and extraction well pairs	2. Requires competent capillary barrier to avoid downward mobilization of contaminants
3. Rapid removal of NAPL accomplished in weeks and months rather than years	3. Higher liability associated with potential for unintended mobilization of DNAPL
4. Accomplishes higher DNAPL removal efficiencies and uses fewer chemicals than cosolvent flooding	4. High cost of waste treatment relative to a destructive technology such as in situ chemical oxidation
5. Safe to use near occupied buildings	5. Design and implementation requires personnel with considerable expertise
6. Can be implemented without aquifer dewatering	6. Performance may suffer in shallow, low permeability, and heterogeneous aquifers

Table 1-3. Factors Influencing SEAR Cost & Performance

Factor	Influence
Permeability	• Composition of surfactant formulation • Design of surfactant flood (to maximize flooding efficiency) • Flooding duration • Labor costs
Heterogeneities	• Design of surfactant flood (to include mobility control measures) • Chemical requirement and costs • Sweep efficiency • DNAPL removal efficiency
Variations in forced hydraulic gradients	• Hydraulic control (design and implementation) • Sweep efficiency • DNAPL removal efficiency

Section 2.0: DEMONSTRATION DESIGN

2.1 Performance Objectives

Performance objectives were set for subsurface DNAPL recovery, as well as for aboveground treatment and recovery components of the SEAR technology demonstration.

2.1.1 Subsurface DNAPL Remediation. The desired endpoint of the SEAR demonstration was to remove DNAPL down to an average residual saturation of 0.05%, which represents an average value for DNAPL saturation throughout the swept pore volume, as determined using a post-SEAR PITT. With an initial estimated swept pore volume of 6,000 gal, a final residual saturation of 0.05% corresponds to 3 gal of DNAPL remaining in the test zone. With an initial estimate of 81 ±7 gal DNAPL in the test zone (DE&S, 1999c), this is approximately equivalent to a 96% DNAPL removal efficiency. In addition, at a minimum, 90% recovery of injected surfactant, isopropyl alcohol (IPA), and tracer was targeted. These targets were anticipated to be economically achievable at most sites where surfactants would be applied and to be easily within the resolution accuracy of the sample analytical procedures and other mathematical methods used for interpreting the final PITT and SEAR data. Discrete-depth samples collected from the multilevel samplers (MLSs) during the SEAR and post-SEAR PITT were to be used in order to determine the efficiency of DNAPL removal with depth. It also was anticipated that lower-permeability contaminated zones might be locations where removal targets would not be met. Due to problems encountered in post-SEAR PITT data interpretation, soil samples collected before and after the SEAR demonstration were used to determine whether aquifer heterogeneities affected surfactant treatment and whether DNAPL contaminants had been redistributed during the surfactant flood.

2.1.2 SEAR Effluent Treatment and Surfactant Recovery. The purpose of the surfactant recovery system was to treat the extraction well effluent so that surfactant recovered from the subsurface could be reinjected into the aquifer. This treatment objective was accomplished by removing DNAPL and excess water from the extraction well effluent. The specific goal of pervaporation treatment was to remove 95% of the extracted contaminant mass, in accordance with State of North Carolina reinjection criteria. The specific goals of UF treatment were to: (a) reconcentrate diluted surfactant sufficiently so that surfactant could be reinjected at 4% by weight (wt%); and (b) to accomplish 90% recovery of surfactant.

2.2 Demonstration Site Background

The SEAR demonstration was conducted at Site 88, the location of the Morale, Welfare, and Recreation (MWR) Dry-Cleaners (Building 25) at MCB Camp Lejeune. At this site, groundwater contamination of the shallow and intermediate aquifers has resulted from the storage and usage of dry-cleaning solvents, tetrachloroethylene (PCE), and Varsol™, a petroleum distillate. PCE is still in use at this active dry-cleaning facility. The boundaries of the dissolved PCE plume in the shallow aquifer as interpreted in August 1996 are provided in Figure 2-1. Due to PCE concentrations as high as 54 mg/L in groundwater samples collected to the northwest of Building 25 (aqueous solubility of PCE at room temperature = 240 mg/L), the presence of immiscible-phase PCE (i.e., PCE DNAPL) was suspected. During site investigations conducted by the ESTCP team, local DNAPL saturations of up to 14% were detected in the lower portions of the shallow aquifer, and free-phase DNAPL was collected from several locations. Varsol™ contamination was detected in the upper portions of the aquifer, but none as free-phase NAPL. Gas chromatography/mass spectrometry (GC/MS) analysis of the free-phase DNAPL samples showed them to be comprised primarily of PCE with Varsol™ as a minor dissolved component (2-14 wt%).

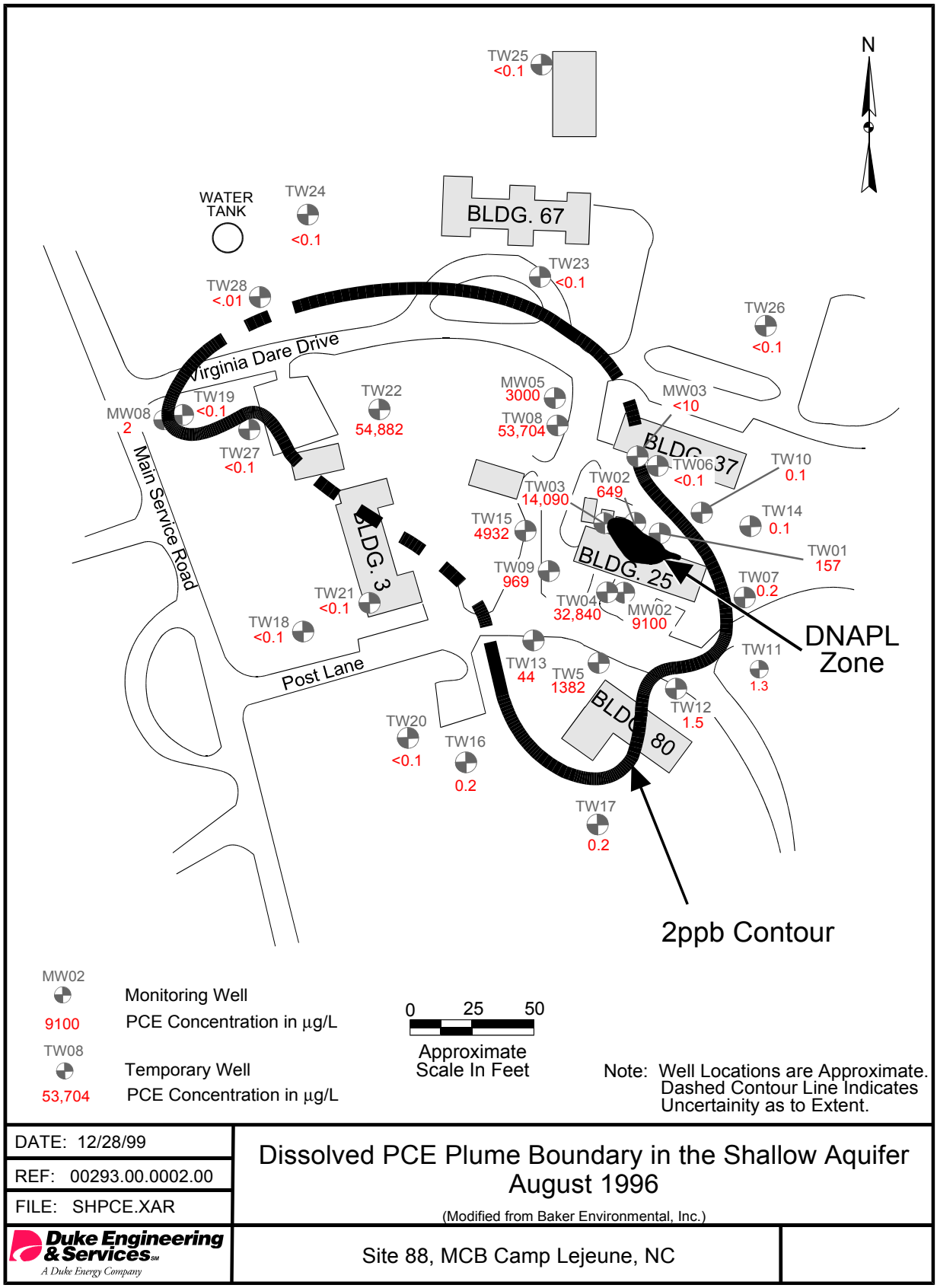

Figure 2-1. Dissolved PCE Plume Boundary in the Shallow Aquifer (August 1996)

2.3 Demonstration Site Characteristics

The DNAPL zone at Site 88 is located beneath Building 25, in the shallow surficial aquifer at a depth of approximately 16-20 ft (5-6 m), and includes an area that extends about 20 ft (6 m) north of the building. The DNAPL occurs immediately above and within a relatively low-permeability layer of silty sediments (hereafter referred to as the basal silt layer) that grade finer with depth from a sandy silt to a clayey silt until reaching a thick clay layer at about 20 ft (6 m) below ground surface (bgs). Initial site characterization activities indicated a decreasing permeability with depth and a permeability contrast of approximately 5:1. Additional characterization data obtained during and following the SEAR demonstration revealed that this fining downward sequence has an actual permeability contrast of approximately 10:1. Postdemonstration simulations conducted to fit the SEAR field data suggest that the DNAPL-contaminated portions of the aquifer can be roughly divided into three permeability zones: the upper zone (~15-18 ft bgs; 4.6-5.5 m bgs), the middle zone (~18-19 ft bgs; 5.5-5.8 m bgs), and the lower zone (~19-20 ft bgs; 5.8-6.1 m bgs). The site conceptual model, or geosystem, is shown in cross section in Figure 2-2. The approximate DNAPL boundary is shown in Figure 2-3.

The upper zone is generally characteristic of the shallow aquifer, which is primarily composed of fine to very fine sand and is the most permeable of the three zones. The hydraulic conductivity of the upper zone is estimated to be about 5×10^{-4} cm/sec (1.4 ft/day). The hydraulic conductivity of the middle zone, which is composed predominantly of silt, is estimated to be approximately 1×10^{-4} cm/sec (0.28 ft/day), or about five times less permeable than the upper zone. The lower zone is composed predominantly of clayey silt, with a hydraulic conductivity that is believed to be approximately 5×10^{-5} cm/sec (0.14 ft/day) or perhaps even lower, although the permeability of the lower zone is not well characterized at this time. The upper- and middle-zone estimates of hydraulic conductivity are based on the analysis of pre-SEAR tracer test data from MLSs. The bottom-zone estimate of hydraulic conductivity is supported by the results of grain-size analysis of 72 post-SEAR soil samples that were collected from the bottom 3 ft of the test zone. The grain-size analyses confirm that the DNAPL zone is located above the clay aquitard in a fining downward sequence from fine sand to clayey silt.

The pre-SEAR PITT was conducted during May/June 1998 to measure the volume and relative distribution of DNAPL present in the test zone before surfactant flooding. The results of this pre-SEAR PITT indicated that approximately 74-88 gal (280-333 L) of DNAPL were present in the test zone (DE&S, 1999c). Average DNAPL saturations were found to be highest in the portion of the test zone that is adjacent to Building 25, at about 4.5% saturation. Although the pre-SEAR PITT provided valuable site characterization data, the SEAR results and the post-SEAR soil sampling results indicate that the pre-SEAR PITT underestimated the initial DNAPL volume and saturations. This is discussed further in Section 3.3.

2.4 Physical Setup and Operation

The SEAR demonstration well field is situated in the portion of the DNAPL zone that lies just outside and north of Building 25. It consists of a total of three injection and six extraction wells arranged in a 3 × 3 × 3 divergent line-drive configuration. In addition, hydraulic control wells are located at each end of the centrally located row of injection wells. Thus, the test-zone well field comprises 11 wells in total, as shown in Figure 2-3. The test area formed by the 3 × 3 × 3 array of injection and extraction wells is 20 ft wide by 30 ft long. The well field and geosystem is shown in cross section in Figure 2-2. MLSs were installed at six locations to monitor discrete depths in the test zone. One MLS bundle was installed between each injection-extraction well pair, as shown in Figures 2-2 and 2-3. Each MLS consisted of a bundle of three sampling points; the points at MLS-1, MLS-4, MLS-5, and MLS-6 were installed at approximately 16.5, 17.5, and 18.5 ft bgs, while the points at MLS-2 and MLS3 were installed at 17.0, 18.5, and 19.5 ft bgs.

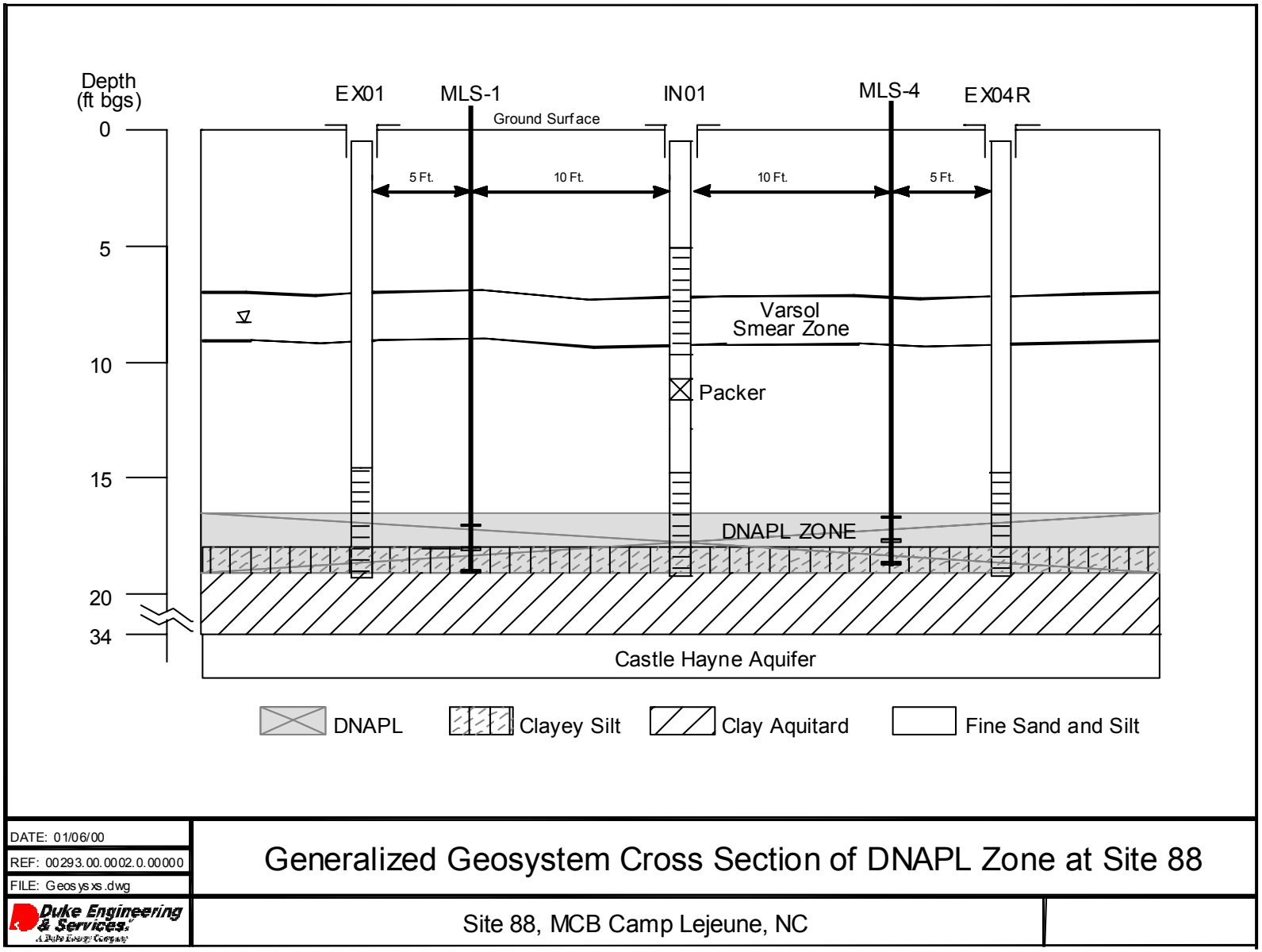

Figure 2-2. Generalized Geosystem Cross Section of DNAPL Zone at Site 88, MCB Camp Lejeune

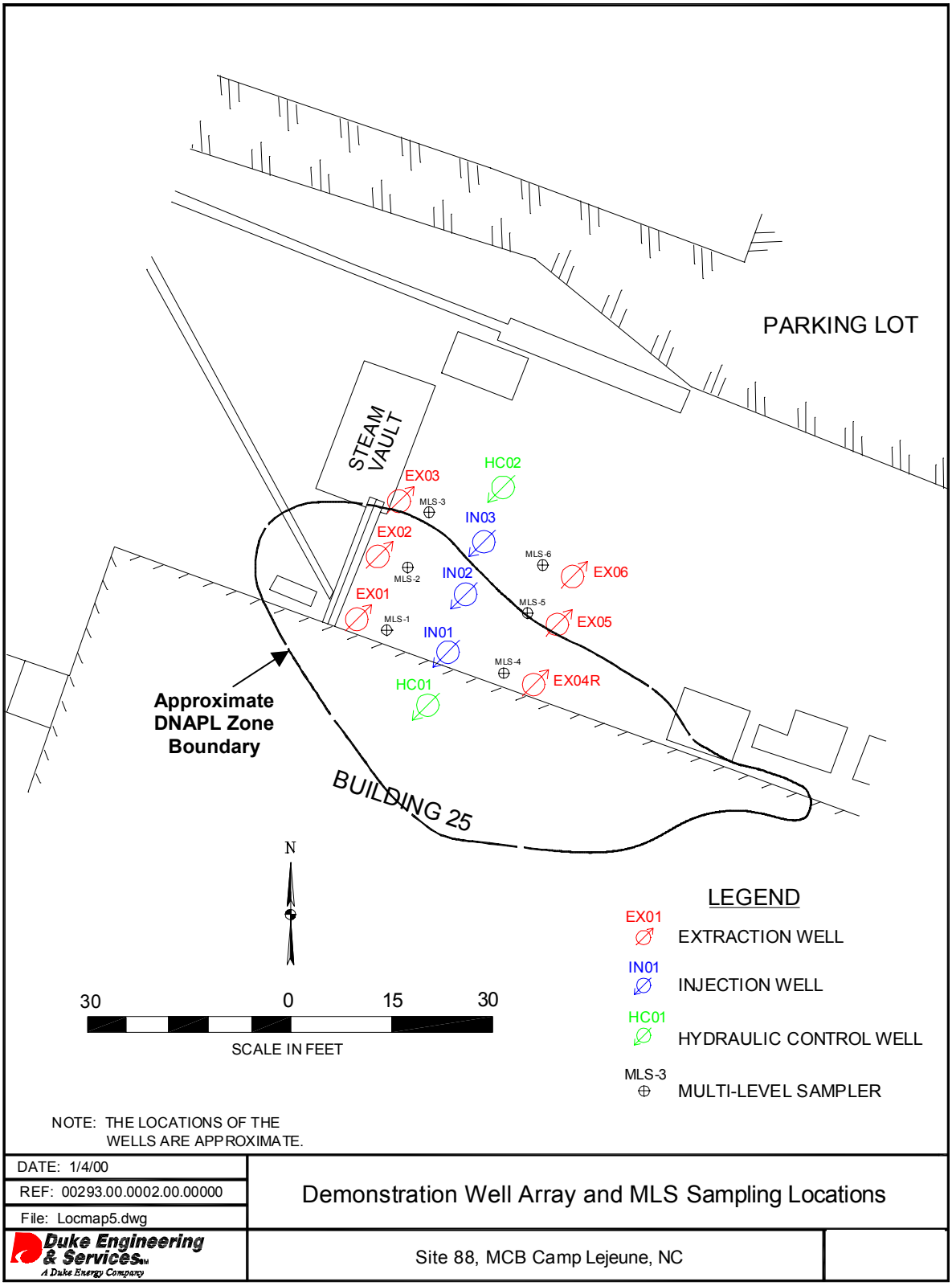

Figure 2-3. Demonstration Well Array and MLS Sampling Locations

The surfactant formulation was designed specifically for this demonstration to meet two objectives: (1) to maximize DNAPL solubilization, and (2) to maximize performance of the surfactant recovery process (i.e., UF system). Extensive laboratory testing was conducted to optimize the surfactant formulation to meet these dual objectives. The result was the selection of a custom surfactant, Alfoterra 145-4-PO sulfate™, that was manufactured by Sasol (formerly Condea Vista Company) for the SEAR demonstration. The surfactant injectate formulation is presented in Table 2-1.

Table 2-1. Camp Lejeune Surfactant Formulation

Constituent	Concentration
Alfoterra 145-4PO sulfate™ surfactant	4 wt%
Isopropyl alcohol (IPA)	16 wt%
Calcium chloride	0.16wt%-0.19wt %

During the 58-day surfactant flood, 29,700 gal (112,000 L) of the surfactant mixture was injected, which is equivalent to approximately five test-zone pore volumes, with a residence time of about 12 days per pore volume. The total mass of surfactant, IPA, and $CaCl_2$ injected during this period are provided in Table 2-2. During the surfactant flood, lateral hydraulic control was accomplished by injecting source water (i.e., site potable water) with 0.16-0.19 wt% $CaCl_2$ in solution into the two hydraulic control wells, HC01 and HC02. Vertical hydraulic control above the test zone was implemented by injection of the source water and $CaCl_2$ solution into the upper screens of the injection wells while surfactant was being injected into the lower screens of the injection wells. The two different injectates were separated from each other by an inflatable packer located between the upper and lower screens in the three injection wells. The clay layer beneath the DNAPL zone provided hydraulic containment below the test zone. The total surfactant injection rate was 0.4 gpm, initially split evenly between the three injection wells (0.133 gpm/well) as called for in the SEAR design. The total extraction rate for the surfactant flood was 1.0 gpm. Flowrates were varied during different phases of the demonstration, as discussed in Section 3.2. The 58-day surfactant flood was followed, without interruption, by 74 days of water flooding, the last 40 days of which included the post-SEAR PITT.

Table 2-2. Mass of Surfactant Formulation Chemicals Injected

Constituent	Mass Injected
Surfactant	9,718 lb (4,410 kg)[(a)]
IPA	38,637 lb (16,620 kg)
Calcium chloride	1,806 lb (820 kg)

(a) This includes 1,806 lb (820 kg) of recovered surfactant that was reinjected during the latter 20 days of surfactant flooding.

Injection rates were controlled by manual needle valves in the control trailer and monitored by the SCADA system. Pneumatic submersible pumps were utilized for extraction. Extraction rates were controlled via pneumatic controllers located at each extraction wellhead, and were monitored by the SCADA system.

Free-phase DNAPL recovery during surfactant flooding and postsurfactant water flooding operations was conducted every 2-3 days using a peristaltic pump to remove DNAPL that slowly accumulated in the sumps of several wells. The volume of free-phase DNAPL recovered was recorded for each well.

The units used in the aboveground treatment process, including the pervaporation system, the ultrafiltration unit, and appurtenant equipment (e.g., feed and storage tanks and analytical equipment), were delivered to the demonstration site in March 1999. For weather protection, this equipment was housed in a large field tent that was situated east of the well field and the control trailer (see Figure 2-4 for site layout). The arrangement of equipment inside the field tent is shown on Figure 2-5. The aboveground treatment processes were operated for more than two months on a continuous basis to treat the SEAR effluent to enable surfactant recovery for reuse. Wastewater generated during the operation of these processes was sent to a wastewater tanker located to the east of the field tent (see Figure 2-4). A total of three recycled surfactant batches were mixed and injected between May 13 and June 3, 1999. Although the surfactant recovery processes continued to operate for a short duration beyond this period, no additional surfactant recovered was reinjected. Following this period, SEAR effluent was delivered to the wastewater tanker for treatment at an air stripping facility located on base.

2.5 Monitoring Procedures

SEAR monitoring included regular collection of samples for analysis in accordance with the sampling and analysis plan (DE&S, 1999a). System operations also were continually monitored according to the SEAR work plan (DE&S, 1999b).

Samples were collected from the batch mixing tanks for analysis to verify that each injectate batch met design specifications prior to injection. Surfactant batch samples were analyzed at off-site laboratories for surfactant, IPA, and calcium. Phase behavior of each surfactant batch mixture was confirmed by on-site testing to ensure that each batch was a Winsor Type I or Type III system. Hydraulic control and water flood batches were qualitatively analyzed on site for $CaCl_2$ concentrations by measuring specific conductance. SEAR samples were collected from all extraction wells (EX01-EX06) and from selected MLSs (MLS-1, MLS-4, and MLS-2) every four days throughout the demonstration. Because of the fine-grained sediments in the test zone, not all of the selected MLS sampling points produced sufficient sample volumes for analysis.

Groundwater samples were collected at the extraction wells throughout flooding activities to monitor the recovery of injected chemicals and PCE from the treatment zone. In addition, numerous wells were monitored outside the test zone on a monthly basis to evaluate whether injectate was escaping from the test zone, both laterally and vertically downward (i.e., to test for effective hydraulic control). Monitored analytes included surfactant, IPA, arsenic (a minor impurity in the bulk $CaCl_2$), and PCE. Further discussion of monitoring locations is provided in the ESTCP Technology Demonstration Plan (NFESC, 1999).

Injection and extraction flowrates were monitored continuously by the SCADA system. Manual flowrate measurements were conducted daily to verify that the electronic flowmeters were accurate. Electronic flowmeters were adjusted or recalibrated if found to be out of specification per the Work Plan (DE&S, 1999b). With the use of electronic pressure transducers, water levels in all injection and extraction wells were monitored continuously by the SCADA system. Water levels also were measured manually on a daily basis to verify that the electronic water-level measurements were accurate, and adjusted as required.

The extraction well effluent was directed to the aboveground treatment processes in order to remove DNAPL contaminant and to recover the surfactant. The separation of DNAPL from the surfactant was accomplished using pervaporation. To assess the pervaporation performance, samples were collected at the influent to the pervaporation system, and from the residual stream of each of the two pervaporation units. These samples were analyzed for PCE and alcohol as well as for components of the

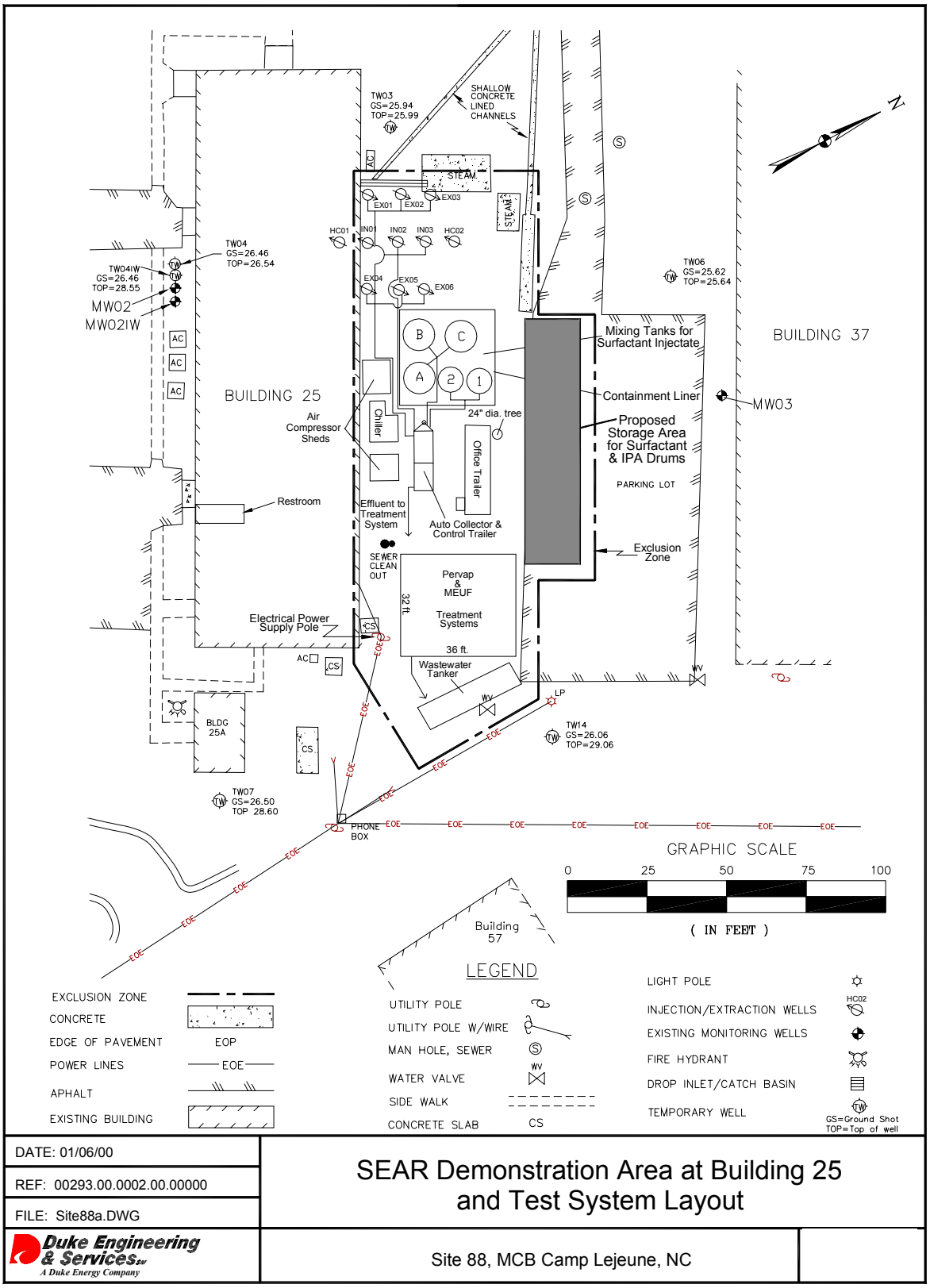

Figure 2-4. SEAR Demonstration Area at Building 25 and Test System Layout

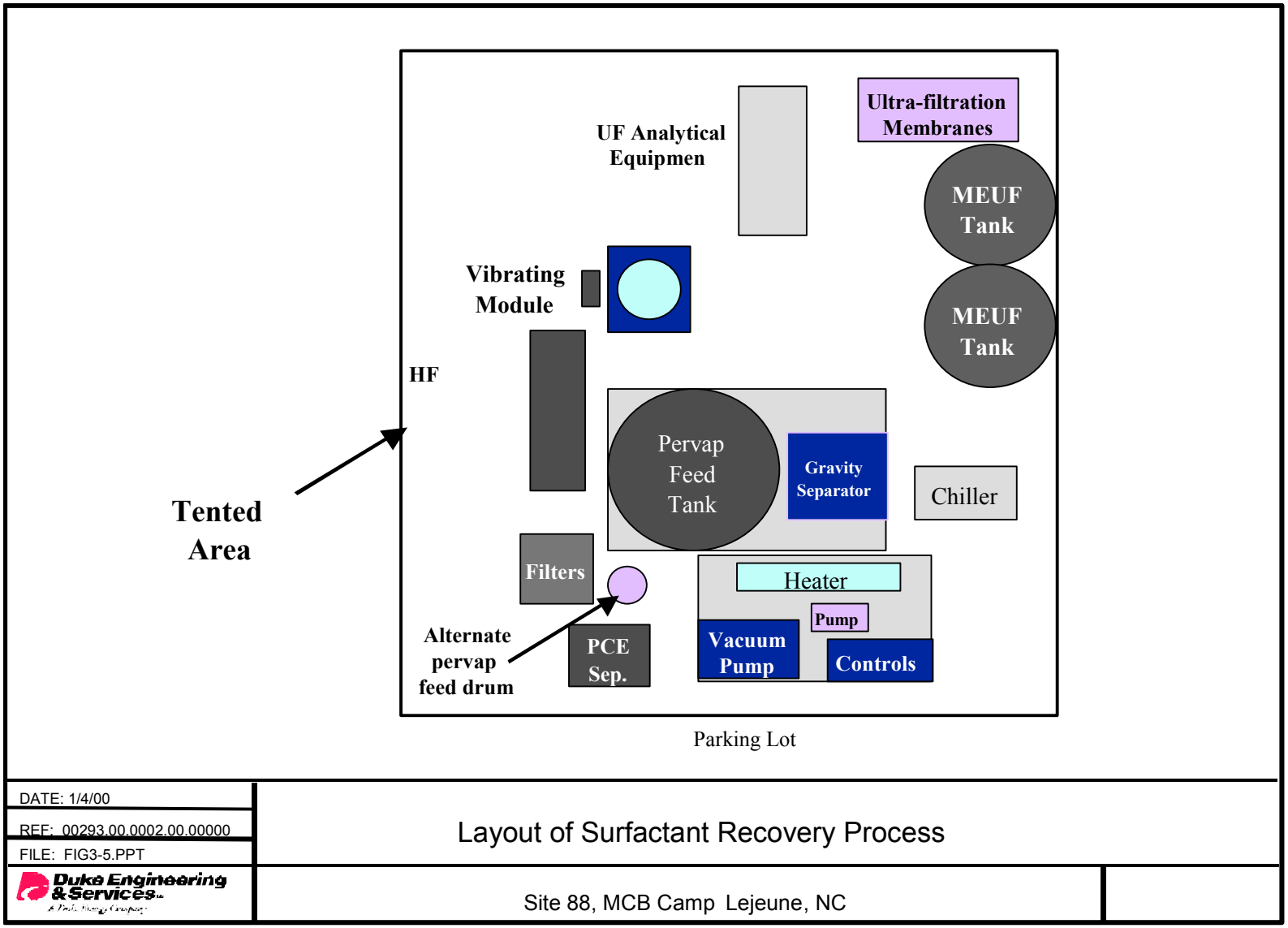

Figure 2-5. Layout of Surfactant Recovery Process Equipment

secondary contaminant at the site (Varsol™) to determine the efficiency of contaminant and alcohol removal. The pervaporation effluent was directed to the micellar-enhanced ultrafiltration unit (MEUF). To evaluate MEUF effectiveness, samples were collected from the feed, the permeate, and the retentate streams, and then analyzed for surfactant to perform a surfactant mass balance. Neither the pervaporation nor the MEUF systems were designed to recover IPA. Effective IPA removal by a nonporous membrane process (i.e., pervaporation) requires a thicker and more hydrophilic membrane that would not have been appropriate for PCE removal. Likewise, IPA recovery by a porous membrane process (i.e., membrane filtration) requires a much lower molecular weight cutoff membrane that would not have been cost-effective for recovering surfactant micelles.

Once sufficient volume of surfactant was recovered by the MEUF system, the recovered batch was transferred to an injectate mixing tank for reinjection. Because the recovery process could not preserve the original design concentrations of the surfactant injectate (i.e., surfactant, IPA, and calcium concentrations), the recovered batch had to be reconstituted. This required a multistep process as follows:

1. Sampling and analysis of the recovered surfactant batch

2. Reconstitution of the batch concentrations to SEAR design specification

3. Filtration to remove iron-organoflocculent (by-product of surfactant recovery) prior to reinjection.

Reconstitution of the recovered surfactant to design injectate concentrations required the addition of fresh, unused surfactant (to dilute the resulting super concentration of calcium by MEUF), and additional IPA and source water. Once reconstituted, the recovered surfactant batch was sampled and analyzed before reinjection under the same protocol followed for all other surfactant batches, as discussed previously in this section.

2.6 Analytical Procedures

The analytical methods used to monitor and assess SEAR performance are listed in Table 2-3. Further explanation of these analytical methods can be found in the sampling and analysis plan (DE&S, 1999a).

Table 2-3. Analytical Methods

Analyte	Analytical Method	
	Subsurface	Surface
Surfactant	Hyamine titration	Liquid chromatography
IPA, PCE[(a)]	EPA 8015 modified	EPA 8015 modified
PCE[(b)]	EPA 8260	EPA 8260
Varsol™ [(c)]	EPA 8260	EPA 8260
Calcium	EPA 200.7	–
Arsenic	EPA 206.2	–
Alcohol Tracers[(d)]	EPA 8015 modified	–

(a) SEAR samples for high PCE concentrations in the test zone and PCE samples from the pervaporation system that were analyzed on site.
(b) Monitoring samples for low PCE concentrations outside the test zone and other PCE samples (pervaporation) sent for off-site analysis.
(c) Varsol™ marker compounds: decane, undecane and 1,3,5-trimethylbenzene.
(d) Alcohol tracers: 1-propanol, *sec*-butanol, 1-hexanol, 1-heptanol, and 2-ethyl-1-hexanol.

Section 3.0: PERFORMANCE ASSESSMENT

3.1 Summary of Field Observations and Data Assessment

A brief overview of SEAR activities and field results is provided in this section. A comprehensive discussion of field operations and the technical results can be found in the SEAR Final Report (DE&S, 2000).

3.1.1 Subsurface Treatment. The SEAR demonstration at Site 88 included multiple phases of field activities from March to August 1999. Injection/extraction operations occurred continuously for 143 days, and included a pre-SEAR water flood, surfactant flood, post-SEAR water flood, post-SEAR PITT, and post-SEAR soil sampling.

A significant increase in the extraction well effluent PCE concentration was observed in several extraction wells due to surfactant flooding. At extraction well EX01, the effluent PCE concentration increased from an average of approximately 200 mg/L to about 2,800 mg/L at the peak breakthrough. At EX04R, the PCE concentration increased from 80 mg/L to approximately 1,000 mg/L at the peak. The extraction wells farther away from the building showed lower concentrations of solubilized PCE, which was due to the lower residual DNAPL saturation at these locations. However, at all extraction wells, the peak concentrations of surfactant-enhanced PCE solubilization were lower than anticipated from design simulations. This result is due to the actual permeability of the basal silt layer being lower than originally expected and, consequently, the poor sweep of surfactants through this zone. The PCE concentration curves for EX01, EX02, and EX03 are provided in Figure 3-1. At MLS sampling location MLS-4T (Figure 3-2a), PCE concentrations as high as 10,000 mg/L were observed. A negligible amount of surfactant was detected at the bottom MLSs such as MLS-4B (Figure 3-2b), which indicates that very little surfactant swept the basal silt layer above the aquitard. This result can be attributed to preferential surfactant flow through the more permeable upper zones and consequential bypassing of the bottom zone. The low permeability of the bottom zone (~10^{-5} cm/sec) prevented an effective surfactant sweep as the gradients required to sustain surfactant flow through this zone were not achievable in the shallow subsurface setting at MCB Camp Lejeune. Furthermore, the limited range of hydraulic gradients inhibited the injection of mobility control fluids to block the upper, more permeable zones and force surfactant fluids through the bottom, less permeable zones.

In addition to enhancing the solubility of the DNAPL, the surfactant flood also enhanced the recovery of free-phase DNAPL as a result of lowering the IFT of the DNAPL. Lowering the IFT decreases the capillary forces retaining the DNAPL in the soil pores and thereby enhances recovery of DNAPL by the extraction wells. Because of these site-specific circumstances and because of its greater mass removal efficiency, mobilization of DNAPL during the surfactant flood was desirable and intended by design. A total of 76 gal (288 L) of PCE was recovered during the surfactant flood and subsequent water flood, of which approximately 32 gal (121 L) of PCE was recovered as solubilized DNAPL and 44 gal (167 L) as free-phase DNAPL.

Potentiometric surface maps of the shallow aquifer generated for several phases of the demonstration show that hydraulic control of injected fluids was effectively maintained, with the exception of a minor loss of hydraulic control at HC01 during Phase II of the surfactant flood. This loss was caused by a slightly exaggerated gradient between injection well IN01 and HC01 with the higher viscosity surfactant fluids. The loss of hydraulic control was manifested in increasing IPA concentrations with time at monitoring well RW03, peaking on July 27 (Day 112 of the test) at 2,798 mg/L (compare to IPA injectate concentration = 160,000 mg/L). However, recovery of 88% of the injected IPA by the end of the demonstration suggests that any loss of hydraulic control was very minor. During the post-SEAR water

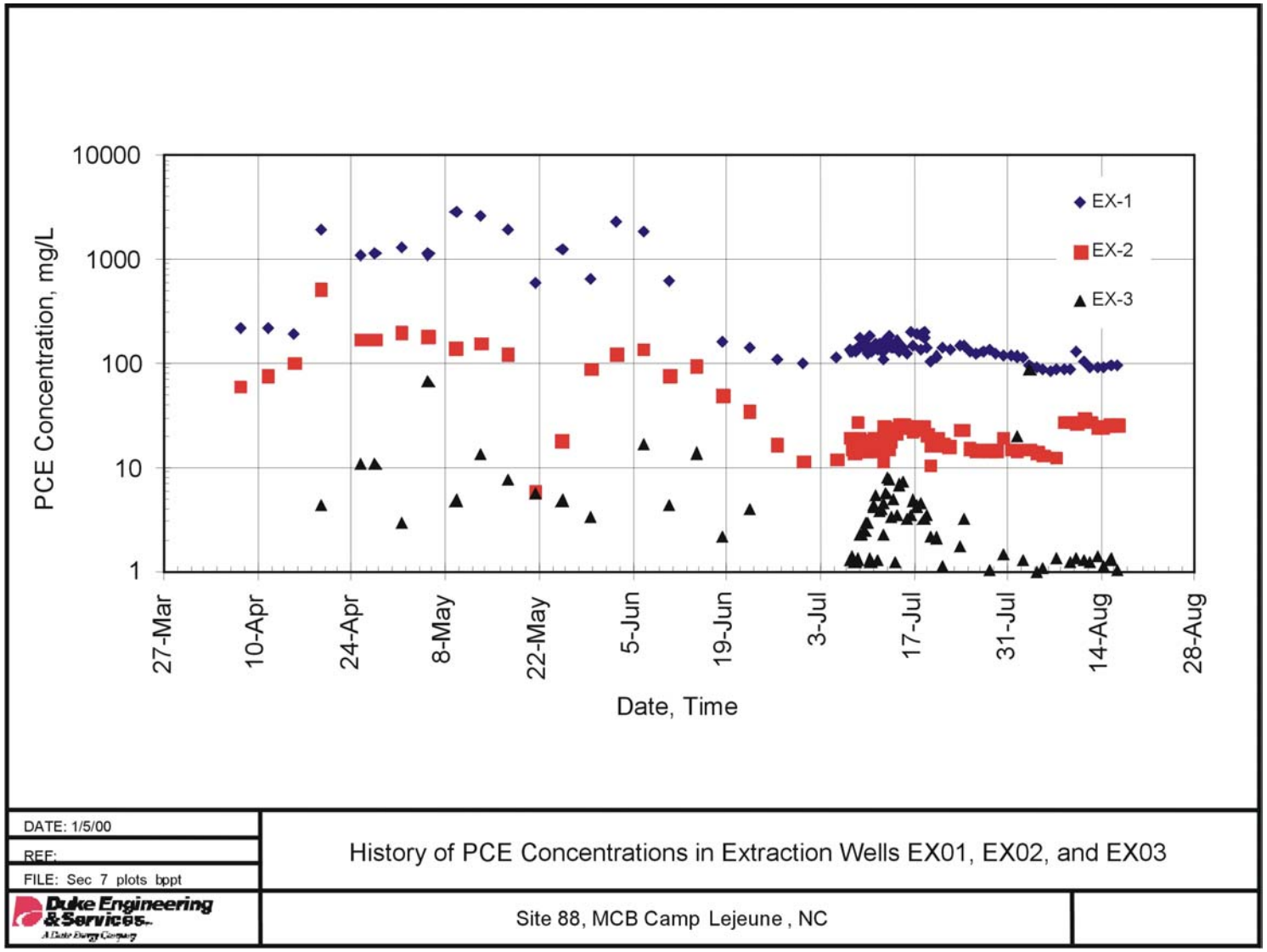

Figure 3-1. History of PCE Concentrations in Extraction Wells EX01, EX02, and EX03

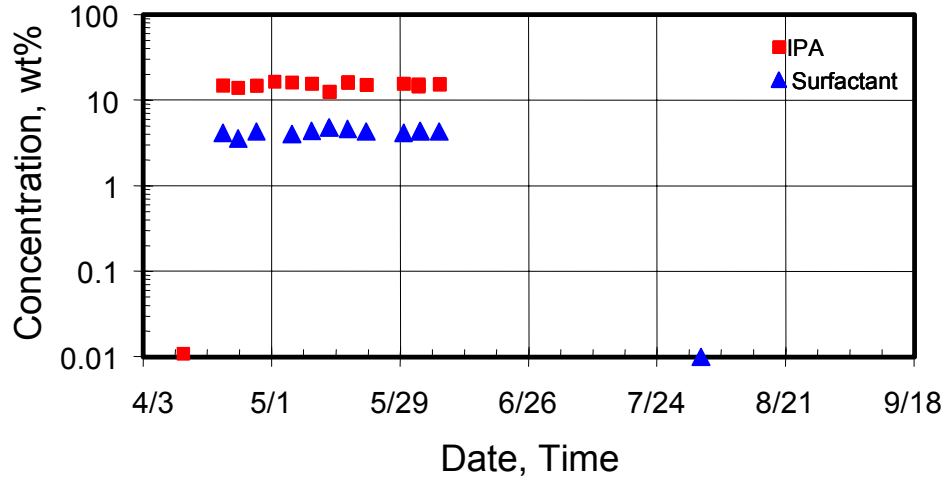

a. History of IPA and Surfactant Concentrations at MLS-4T

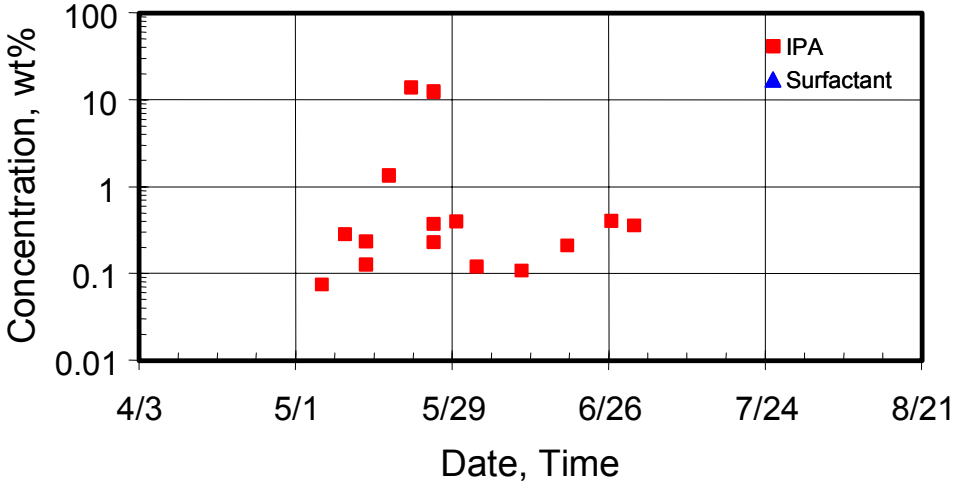

b. History of IPA and Surfactant Concentrations at MLS-4B

DATE:6/26/01 REF: 0001 FILE:FTRFIGURES001.PPT	History of IPA and Surfactant Concentrations at MLS-4T and MLS -4B
Duke Engineering & Services	Site 88, MCB Camp Lejeune, NC

Figure 3-2. Surfactant and IPA Results at MLS-4T and MLS-4B

flood and post-SEAR PITT, the potentiometric surface maps show that hydraulic containment was fully established and maintained for the remainder of the demonstration. In support of this, IPA concentrations at RW03 dropped sharply to 428 mg/L with the last monitoring sample collected on August 27.

Residual surfactant and IPA remaining in the ground following SEAR treatment were not a concern for further transport of residual and dissolved-phase contamination to uncontaminated regions of the aquifer. Surfactants cause ultralow interfacial tensions only under optimal salinity conditions, i.e., high electrolyte concentrations. For the surfactant formulation used at Camp Lejeune, approximately 1,800 mg/L calcium chloride was required to produce ultralow interfacial tensions for high contaminant solubilization and to induce DNAPL mobilization. During the postsurfactant water flood, 1,000 mg/L calcium chloride was injected, which reduced electrolyte concentrations in the aquifer. Such conditions are consistent with a Winsor type I phase behavior, which results in relatively high interfacial tensions that will limit enhanced solubilization and mobilization. Furthermore, the Camp Lejeune surfactant is biodegradable. Post-SEAR groundwater monitoring (see Section 3.1.3) suggests resumption of biological activity as evidenced by the formation of acetone from IPA. It is expected that residual surfactant and IPA will be biodegraded and thus not be a mechanism for further transport of the contaminants. Furthermore, residual surfactant may enhance the biopolishing process. There have been no regulatory concerns with the residual surfactant or IPA left in the ground at Site 88. It is expected that regulatory controls on chemicals remaining in the ground following a SEAR demonstration will vary from site to site and depend on factors such as the proximity of the source zone to drinking water or other protected water resources (e.g., wetlands).

The post-SEAR PITT was conducted, along with soil core sampling, to measure the volume of DNAPL remaining in the test zone after the surfactant flood. The results of the post-SEAR PITT, however, proved to be unusable due to interference with a minor component of the surfactant that sorbed to the aquifer. Therefore, performance assessment of the SEAR demonstration was based on the results of the post-SEAR soil sampling. All soil samples collected for analysis of volatile organic compounds (VOCs) were field preserved with methanol.

The post-SEAR soil sample data, which consisted of 60 soil samples collected at 12 locations, was used to generate a three-dimensional distribution of the DNAPL volume remaining in the test zone following the surfactant flood. The lateral distribution of DNAPL indicates that the majority of the DNAPL that remains in the test zone is located near the building, between wells EX01 and EX04. DNAPL volume decreases away from the building, in the area between wells EX02 and EX05, and very little DNAPL is present in the portion of the test zone that is farthest from the building, between wells EX03 and EX06. The vertical distribution of remaining DNAPL indicates that DNAPL was effectively removed from the more permeable sediments, generally above about 17.5 ft (5.3 m) bgs, and that DNAPL still remains in the lower permeability basal silt layer. These results are not completely unexpected given that the highest pre-SEAR DNAPL saturations were near the building, as well as the expectation that it would be most difficult to remove DNAPL from the lowest permeability sediments at the site.

Analysis of the post-SEAR soil core data indicates that approximately 5.2 ±1.6 gal (20 ±6 L) of DNAPL remain in the zone that was effectively swept by the tracers and surfactant (i.e., the zone above approximately 18 ft bgs). In addition, data analysis from the post-SEAR soil cores indicates that approximately 23.5 ±5.5 gal (89 ±21 L) remain in the mid-to-bottom zone that was not effectively penetrated by the tracers or surfactant (i.e., from 18 ft bgs down to the clay aquitard). The initial PITT estimated that the volume of DNAPL in the test zone before the surfactant flood was approximately 81 ±7 gal (307 ±26 L). It is concluded that the total volume of DNAPL present in the test zone before the surfactant flood is best represented by both the volume of DNAPL measured by the PITT plus the volume of DNAPL estimated (from soil core data analysis) for the zone below 18 ft (5.5 m) bgs, for a total pre-SEAR DNAPL volume of approximately 105 gal (397 L).

Based on the volume of DNAPL distributed in the upper of the two permeability zones, it can be inferred that the surfactant flood recovered between 92% and 96% of the DNAPL that was present in the pore volume that was swept by the pre-SEAR PITT (i.e., above 18 ft bgs). Summing the two zones (i.e., those swept by surfactant and those not swept) as a basis for estimating the total pre-SEAR volume of DNAPL, the surfactant flood recovered approximately 72% of the DNAPL from the entire SEAR demonstration test zone, which includes all zones above the aquitard.

DNAPL recovery could have been increased from the middle (i.e., silt) zone by continuing the surfactant flood with additional pore volumes of surfactant and/or by increasing injection and extraction flowrates. There are certainly limits with respect to the magnitude and sustainability of higher flowrates in such a shallow, low-permeability aquifer without dewatering the zone of interest. However, well development methods are available that can be employed to increase the productivity of wells at Site 88. Because of the low permeability conditions imposing an average surfactant residence time of 12 days, injecting additional pore volumes of surfactant, although possible, would not have been an economical alternative. The preferable solution is to use surfactant-polymer or surfactant-foam during surfactant flooding, i.e., to implement mobility control measures, to improve the recovery of DNAPL from heterogeneous zones. When hydrogeological conditions are not limiting, mobility control has the potential to improve surfactant flood performance while reducing the number of surfactant pore volumes required to remediate a DNAPL zone. Unfortunately, the shallow low permeability conditions of Site 88 prevent the implementation of mobility control at this site.

3.1.2 Aboveground Treatment. The aboveground effluent treatment processes, pervaporation and ultrafiltration, operated for more than two months to recover surfactant from the extraction well effluent (containing surfactant and solubilized DNAPL) for reinjection into the aquifer. The combined extraction well effluent averaged 1 gpm and contained a maximum of 900 mg/L PCE, 1.2 wt% surfactant, and 4.1 wt% IPA at peak breakthrough. Despite high concentrations of iron (14 mg/L Fe^{2+}) and calcium (300 mg/L Ca^{2+}), only limited membrane fouling was observed. The overall objective of recovering surfactant with characteristics acceptable for reinjection was accomplished, which required an average 95% contaminant removal from the extracted surfactant solution and reconcentration of subsurface-diluted surfactants to a minimum of 4.5 wt%. Pervaporation accomplished the 95% removal objective for PCE (see Figure 3-3). Whether pervaporation achieved 95% removal for the secondary contaminant, Varsol™, when averaged over the operational period (before and after surfactant breakthrough) is difficult to evaluate. This is due to the exceedingly low concentrations of Varsol™ extracted from the well field. However, there is sufficient data for two of the three Varsol™ marker compounds to indicate that, in the presence of surfactant, decane removal averaged 56% and undecane removal averaged 33%. The poorer performance of pervaporation for these semivolatile compounds was expected, and indicates that alternative technologies must be considered if the removal of semi- and nonvolatile compounds from a surfactant solution is a primary objective. As demonstrated on this project, pervaporation is a very viable technology for the removal of volatile compounds from a surfactant solution.

Ultrafiltration achieved or exceeded the desired concentration factor (of five on average) necessary to remix the recovered surfactants at design injectate concentrations for reinjection. With the need to replace constituents in the surfactant solution that were not being recovered in the effluent treatment processes, such as alcohol, it was necessary to minimally concentrate the surfactants to 4.5 wt% for reinjection at their original concentration of 4.0 wt%. The average influent surfactant concentrations from the pervaporation unit to the ultrafiltration unit were 1.1 wt%, whereas the average permeate surfactant concentrations were 0.25 wt%; therefore, surfactant recovery was approximately 77%. Surfactant mass balance calculations performed over the entire volume of processed surfactant result in a similar calculation of approximately 76% surfactant recovery. It is approximately equivalent to 95% recovery of surfactant with each pass over five passes, when the retentate (concentrated surfactant stream) is being recycled to the influent and the permeate (dilute surfactant stream) is being disposed. System pressures were up to

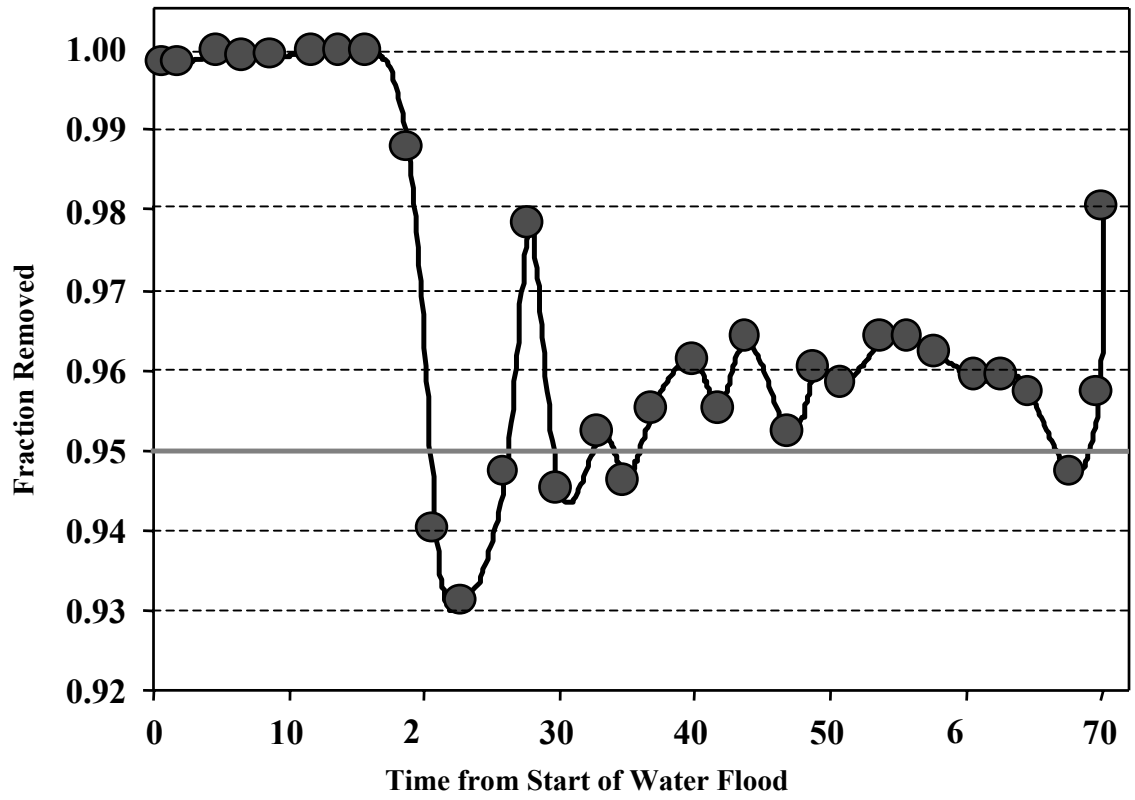

DATE: 01/05/00	Fraction of PCE Removed by Pervaporation Unit
REF: 00293.00.0002.00.00000	
FILE: pervapfigs2ppt	
Duke Engineering & Services	Site 88, MCB Camp Lejeune, NC

Figure 3-3. Fraction of PCE Removed by Pervaporation Unit

twice as high in the field due to slight membrane fouling by iron and humic materials which caused higher leakage of surfactant across the membrane. At the same time, lower than anticipated surfactant concentrations in the SEAR effluent (1 wt% vs. 1.5 wt% at peak surfactant breakthrough) required a greater number of passes being required to achieve the target surfactant concentration which also increased surfactant losses. Due to operational logistics, surfactants were often concentrated to a higher concentration (e.g., to 5-6 wt%) than necessary. Therefore, although the 76-77% surfactant recovery fell short of the 90% target, it was considered to be within an acceptable range.

The primary issue with UF performance for surfactant reconcentration was the unintended parallel concentration of contaminants and calcium, both of which remained preferentially with the surfactant when water was removed. This is shown in Table 3-1, for the first recycled surfactant batch produced from the UF unit. This represents the most dilute surfactant processed by the UF unit, and it can be

Table 3-1. Comparison of Pervaporation and MEUF Product Streams

Constituent[a]	Pervaporation	Ultrafiltration
Surfactant	0.95 wt%	5.0 wt%
IPA	3 wt%	3.4 wt%
Calcium	0.03 wt%[b]	0.25 wt%
PCE	28 mg/L	139 mg/L
Decane[c]	0.8-1.25 mg/L	6.4 mg/L
Undecane[c]	0.8 – 0.95 mg/L	4.9 mg/L
Trimethylbenzene[c]	BDL	BDL

(a) Except for Varsol™ compounds (see c), values shown for the pervaporation product stream represent average values from April 24, to May 4, 1999; BDL = below detection limits.
(b) An estimated value based on a pervaporation residual sample analyzed for calcium on May 25, 1999.
(c) These were the three compounds used to represent Varsol™, a petroleum distillate mixture that is a secondary contaminant at the site; ranges given for decane and undecane represent the average of two data points collected on April 26 and May 3, and the average of three data points collected on April 19, April 26 and May 3 respectively.

seen that to bring surfactants to their final concentration of 5 wt% required a ten-fold concentration factor. Contaminants and calcium were also concentrated by this factor. Although reconcentration of contaminant is a more critical issue for regulatory compliance, the super concentration of calcium poses a greater concern from an operational standpoint. Although the concentration of contaminants during UF processing can be minimized by making the contaminant removal step more efficient, no solutions are readily available for avoiding unacceptably high concentrations of calcium in the surfactant recovered. Excessive calcium concentrations will degrade the performance of most anionic surfactants used in subsurface applications. However, calcium buildup in MEUF will not be an issue for surfactant recovery at all sites. The degree to which MEUF will concentrate the calcium is a function of the surfactant itself. Furthermore, many sites will not require the sole use of calcium as the electrolyte in order to prevent the mobilization of soil fines.

During this project, the high calcium concentrations in the regenerated surfactant were addressed by adding fresh surfactant to the recovered surfactant in a 1:2 ratio to bring about a dilution effect, i.e., dilution factor of one-third = 33%. This procedure also reduced contaminant concentrations to a level that was acceptable to State of North Carolina regulators for reinjection. This procedure is not generally favorable as it reduces the quantity of reusable surfactant when surfactant recoveries are high (i.e., greater than [1-dilution factor]). However if the overall surfactant recovery efficiency inclusive of both subsurface and aboveground surfactant losses is less than or equal to [1-dilution factor], and the site

is being remediated using a panel-by-panel approach, the loss of reusable surfactant impacts just one panel of the entire remediation (see Section 5.1). Ion exchange was considered as a potentially effective means of removing the excess calcium; however due to the complexity of the surfactant stream, and the necessity of removing both calcium and chloride ions, this approach is not economically feasible. In order to fully realize the cost benefits of surfactant reuse, additional technology developments are necessary to either improve the quality of surfactant recovered by MEUF or to alter the surfactant formulation to avoid the calcium concentration problem.

During the SEAR demonstration, a total of 1,806 lb of surfactant (active), representing approximately one-fifth the total mass of injected surfactant, was reinjected during the SEAR demonstration. Another 1,789 lb of surfactant (active) was recovered by the pervaporation and UF processes, but not reinjected. The composition of the reinjected surfactant is shown in Table 3-2.

Table 3-2. Composition of Recycled Surfactant Injected

Batch #	Volume (gal)	PCE (mg/L)	Surfactant (4%wt)		IPA (16%wt)	
			Recycled	Fresh	Recycled	Fresh
A1	2,760	46.8	66%	34%	2%	98%
B5	2,800	13.7	62%	38%	21%	79%
C5	2,260	43.3	67%	33%	23%	77%

Note: Tank A1 was estimated to contain 3.4%wt IPA before the addition of six drums of IPA and thorough mixing with air. The result of this mixing was a considerable loss of IPA due to volatilization before analysis and final blending. Calcium concentrations are not shown.

3.1.3 Post-SEAR Groundwater Monitoring. Limited post-SEAR groundwater monitoring was conducted to examine the long-term effects of SEAR treatment on the aquifer. There were no regulatory compliance issues to address regarding the impact of residual chemicals remaining in the aquifer following SEAR treatment. Additionally, funding for this effort was very limited. Therefore, although the scope of the post-SEAR monitoring could have been quite extensive, it was focused primarily on determining the impact of unremoved DNAPL in the test zone. This was addressed by monitoring select wells for reinfiltration of free-phase DNAPL from treated zones that had only been partially remediated, and by collecting groundwater samples to observe PCE concentration rebound in the test zone. It should be recognized that the post-SEAR monitoring is greatly complicated by free-phase DNAPL and aqueous plumes adjacent to the treatment zone that are migrating back into the remediated zone. (Free-phase DNAPL reentry into the treated zone is much like taking the first slice out of a fruit pie; the filling from the uncut portions of the pie flows into the void.)

The results of the post-SEAR groundwater monitoring are provided in Tables 3-3 and 3-4. Due to the acetone concentrations observed during the first post-SEAR sampling round, IPA was added as an analyte to the second round of post-SEAR groundwater monitoring conducted in February 2001. The sampling locations can be found in Figures 4-1 and 4-4 of Appendix G of the SEAR Final Technical Report (Battelle and DE&S, 2001) report. Several general observations can be made as follows:

1. PCE concentrations are slightly elevated from post-SEAR conditions.

2. PCE is being reductively dechlorinated in the aquifer, as shown by comparable concentrations of PCE and TCE, as well as significant concentrations of *cis*-1,2-dichloroethene, at several sampling locations.

3. IPA is degrading, as shown by the appearance of acetone.

Table 3-3. Post-SEAR Groundwater Monitoring Results May 2000 Sampling Event

Compound	Sampling Point and Contaminant Concentration (µg/L)					
	RW01	RW02	MW10IW	MW10IWD	ML2T	ML2M
2-Butanone	1,000 U	760 J	10 U	10 U	560 J	1,000 U
1,1-Dichloroethane	500 U	500 U	5 U	5 U	500 U	400 J
Acetone	25,000	73,000	10 U	10 U	54,000	4,800
Carbon Disulfide	500 U	500 U	5 U	5 U	500 U	500 U
cis-1,2-Dichloroethene	7,900 J	1,200	44	28	500 U	1,200
Methylene Chloride	500 U	500 U	5 U	5 U	500 U	500 U
Tetrachloroethene	43,000	89,000	290	280	2,300	780,000
trans-1,2-Dichloroethene	500 U	500 U	5 U	5 U	500 U	500 U
Trichloroethene	690	89,000	160	170	640	1,000
Vinyl Chloride	910	750	2 U	2 U	200 U	200 U
Isopropyl Alcohol	12,000	43,000 JN	1,800 JN	80 JN	31,000	530 JN

J = concentration estimated.
JN = estimated/tentative identification because no standards and calibrations were run for IPA.
U = not detected at reported quantitation limit.

Table 3-4. Post-SEAR Groundwater Monitoring Results February 2001 Sampling Event

Compound	Sampling Point and Contaminant Concentration (µg/L)					
	RW01	RW02	MW10IW	MW10IWD	ML2T	ML2M
2-Butanone	5 U	2,500 U	5 U	5 U	5 U	500 U
1,1-Dichloroethane	1	500 U	1 U	1 U	1 U	71 J
1,1-Dichloroethene	13	500	1	1 U	1 U	240
Acetone	100,000	400,000	5 U	5 U	160,000	440,000
Carbon Disulfide	0.6 J	100 U	1 U	1 U	1 U	100 U
Chlorobenzene	4.0	500 U	1 U	1 U	1 U	190
cis-1,2-Dichloroethene	6,700 J	29,000	34	32	180 U	1,100
Ethylbenzene	11	500 U	1 U	1 U	1 U	100 U
Methylene Chloride	1 U	500 U	1 U	1 U	1 U	100 U
m,p-Xylene	44	500 U	1 U	1 U	1 U	100 U
o-Xylene	8	500 U	1 U	1 U	1 U	100 U
Tetrachloroethene	65,000	19,000	200	340	46	1,100,000
Toluene	2	500 U	1 U	1 U	1 U	100 U
trans-1,2-Dichloroethene	37	1,000 U	2 U	2 U	3	200 U
Trichloroethene	1,500	24,000	150	170	4,700	1,500
Vinyl Chloride	960 J	2,000 J	2 U	2 U	8	200 U
Isopropyl Alcohol	50 U	5,300,000	50 U	50 U	1,200,000	44,000,000 JN

J= concentration estimated.
JN = estimated/tentative identification because no standards and calibrations were run for IPA.
U = not detected at reported quantitation limit.

The presence of IPA, as well as surfactant, has likely stimulated reductive dechlorination at this site, as pre-SEAR groundwater sampling showed PCE to be the predominant contaminant, and only limited concentrations of TCE appearing in the test zone (compared with Table 3-5 of the *DNAPL Site Characterization Report* [DE&S, 1999c]). The increase in PCE concentrations since the end of the SEAR demonstration is not surprising due to the presence of residual DNAPL in the basal silt zone that was not removed during surfactant flooding. It should be noted that PCE concentrations at MLS-2T remain below 1 mg/L, supporting the observation that residual DNAPL was effectively removed from the more

Table 3-5. VOC Concentration Trends at Selected Site 88 Long-Term Monitoring (LTM) Locations

Well ID	Compound				
	PCE	TCE	*cis*-1,2-DCE	*trans*-1,2-DCE	VC
MW01					
(pre- PITT1) May 15, 1997	ND	ND	ND	ND	ND
(pre-SEAR) January 21, 1999	4	ND	ND	ND	ND
(mid-SEAR) July 27, 1999	ND	ND	ND	ND	ND
(post-SEAR) January 18, 2000	ND	ND	ND	ND	ND
MW02					
(pre-PITT1) May 15, 1997	9,100	96	NA	41	ND
(pre-SEAR)January 21, 1999	3,300	160	14	ND	ND
(mid-SEAR) July 27, 1999	12,000	130	31	ND	ND
(post-SEAR) January 18, 2000	10,000	370	29	ND	ND
MW02IW					
(pre-PITT1) May 15, 1997	3,400	120	NA	12	ND
(pre-SEAR) January 21, 1999	1,100	140	44	ND	ND
(mid-SEAR) July 27, 1999	4,900	210E	64	ND	ND
(post-SEAR) January 18, 2000	7,500	270	81	ND	ND
MW04					
(pre-PITT1) May 14, 1997	ND	ND	ND	ND	ND
(pre-SEAR) January 21, 1999	6	ND	ND	ND	ND
(mid-SEAR) July 27, 1999	ND	ND	ND	ND	ND
(post-SEAR) January 18, 2000	ND	ND	ND	ND	ND
MW05					
(pre-PITT1) May 13, 1997	3,000	42	NA	38	ND
(pre-SEAR) January 21, 1999	1,300	33	10	ND	ND
(mid-SEAR) July 27, 1999	6,500	46	23	ND	ND
(post-SEAR) January 18, 2000	5,700	38	23	ND	ND
MW05IW					
(pre-SEAR) May 13, 1997	1,400	910	NA	600	ND
(pre-SEAR) January 21, 1999	910	1,500	1,100	18	ND
(mid-SEAR) July 27, 1999	3,400	2,100	1,800	24	ND
(post-SEAR) January 18, 2000	3,900	2,600	1,900	20	ND

permeable upper zones. The post-SEAR PCE concentration at MLS-2M for both sampling events (780 and 1,100 mg/L) is well above the aqueous solubility limit for PCE (240 mg/L); however, free-phase DNAPL has been observed as a milky white microemulsion in samples from this location; therefore these results are attributed to DNAPL that was collected into the groundwater sample.

It is rather noteworthy that monitoring of the upper versus middle zones, after 18 months, shows that post-SEAR PCE concentrations range from less than 1 mg/L at MLS-2T to 1,100 mg/L at MSL-2M. Interestingly, these two sampling points are located at the same xy location and are separated by only 1.5 ft vertically (17 ft bgs versus 18.5 ft bgs). The apparent cause for this significant PCE gradient (nearly five orders of magnitude) is the hydrogeologic setting and the variable presence of DNAPL. MLS-2T is located in the fine sands that are characteristic of the overall shallow aquifer which have been effectively remediated, whereas MLS-2M is located in the lower permeability basal silt zone, which still contains DNAPL.

In addition to the data provided in Tables 3-3 and 3-4, VOC concentration data have been collected at Site 88 monitoring wells as part of the basewide long-term monitoring program. In

Table 3-5, pre-PITT1, pre-SEAR, mid-SEAR, and post-SEAR VOC data are provided at several of these Site 88 wells. The well locations can be found in Figure 3-2 in Appendix G of the SEAR Final Technical Report (Battelle and DE&S, 2001). The PCE concentrations fluctuate with time, but there is insufficient data to suggest trends that can be attributed directly to SEAR operations. In fact, of the monitoring wells sampled in the long-term monitoring program, only wells MW02 and MW04 are located hydraulically downgradient of the SEAR demonstration area. However, a similar variability in VOC concentrations is observed regardless of sampling location, which suggests that other factors are contributing to the variability in VOC concentrations at the long-term monitoring wells.

Free-phase DNAPL interface measurements collected during post-SEAR groundwater monitoring are compared against baseline conditions obtained prior to initiating SEAR operations in Tables 3-6 and 3-7. A comparison of the pre-SEAR and post-SEAR results show that in all wells where free-phase DNAPL was initially detected and measured (i.e., depth to DNAPL from top of well casing), that post-SEAR DNAPL levels are lower than pre-SEAR DNAPL levels. This indicates that SEAR did have a long-term impact on DNAPL levels in the aquifer. At EX05, a free-phase DNAPL interface was not previously detected, and the post-SEAR data shows that DNAPL has been slowly accumulating in the well sump.

Table 3-6. Free-Phase DNAPL Interface Measurements

Well ID	DNAPL Level Measurements (Below Top of Casing)			
	February 1998 (pre-SEAR)	August 1999 (0 mo. post-SEAR)	May 2000 (9 mo. post-SEAR)	February 2001 (18 mo. post-SEAR)
EX01	17.1	19.45	18.82	18.40
EX02	20.2	20.97	20.70	20.63
EX04R	NM	19.52	19.22	19.18
EX05	NP	NP	21.53	21.55
IN01	19.4	NP	NP	NP
IN02	NP	NP	NP	NP
HC01	21.0	NP	NP	NP
RW01	18.6	NP	19.57	19.25
RW02	18.2	19.45	18.95	18.92
RW04	17.2	16.8	17.26	17.38
RW06	16.8	17.95	17.65	17.64

NM = not measured.
NP = no product.

Tables 3-6 and 3-7 also show an increase in DNAPL levels over time since the end of the SEAR demonstration; however they are still lower than pre-SEAR DNAPL levels. It is fully expected that DNAPL from beyond the treatment zone is now contributing to rising DNAPL levels in wells inside the treatment zone.

3.2 Discussion of Deviations from the Demonstration Plan

Several deviations from the Demonstration Plan (NFESC, 1999) were made with respect to flowrates at select wells during the surfactant flood and post-SEAR water flood. These changes were made after the initial phase of the surfactant flood, and were based on an evaluation of analytical data and observed hydraulic and DNAPL conditions in the test zone. After 27 days (Phase I) of surfactant flooding, injection flowrates were altered in a graded fashion, with flowrates increased near the building and

Table 3-7. Changes in DNAPL Interface Elevations

Well ID	Change in DNAPL Interface Elevations (ft) Referenced to Pre-SEAR DNAPL Levels		
	August 1999 (0 mo. post-SEAR)	May 2000 (9 mo. post-SEAR)	February 2001 (18 mo. post-SEAR)
EX01	–2.35	–1.72	–1.3
EX02	–0.77	–0.5	–0.43
EX04R	NA	NA	NA
EX05	NA	NA	NA
IN01	NA	NA	NA
IN02	NA	NA	NA
HC01	NA	NA	NA
RW01	NA	–0.97	–0.65
RW02	–1.25	–0.75	–0.72
RW04[(a)]	0.4	–0.06	–0.18
RW06[(a)]	–1.15	–0.85	–0.84

(a) Well located outside the test zone.
NA = not applicable.

decreased away from the building, yet they still maintained at a total injection rate of 0.4 gpm as specified in the Demonstration Plan. This graded flowrate scheme was implemented as Phase II of the surfactant flood because laboratory analyses indicated that little or no DNAPL had been removed from the wells farthest from the building, but field observations indicated a continued presence of free-phase DNAPL in the wells adjacent to the building. Therefore, by implementing a graded flowrate scheme for the remaining 31 days of the surfactant flood, additional surfactant was delivered to the most highly contaminated area near the building without increasing the duration of the surfactant flood or the total mass of surfactant used for the overall demonstration. Flowrates during the surfactant flood and post-SEAR water flood and PITT are shown in Table 3-8.

Table 3-8. Flowrates During the Surfactant Flood and Post-SEAR Water Flood and PITT

Well ID	Surfactant Flood Phase I (27 days) *Design Rates* (gpm)	Surfactant Flood Phase II (31 days) *Revised Rates* (gpm)	Post-SEAR Water Flood Phase I (25 days) *Revised Rates* (gpm)	Post-SEAR Water Flood Phase II (9 days) *Design Rates* (gpm)	Post-SEAR PITT (40 days) *Design Rates* (gpm)
IN01	0.13	0.17	0.25	0.20	0.20
IN02	0.13	0.13	0.20	0.20	0.20
IN03	0.13	0.10	0.15	0.20	0.20
IN01U	0.08	0.08	0.08	0.08	0.08
IN02U	0.08	0.08	0.08	0.08	0.08
IN03U	0.08	0.08	0.08	0.08	0.08
EX01	0.17	0.22	0.33	0.25	0.25
EX02	0.17	0.17	0.25	0.25	0.25
EX03	0.19	0.14	0.21	0.28	0.28
EX04	0.17	0.22	0.33	0.25	0.25
EX05	0.17	0.17	0.25	0.25	0.25
EX06	0.17	0.13	0.19	0.25	0.25
HC01	0.20	0.20	0.30	0.30	0.30
HC02	0.20	0.20	0.30	0.30	0.30

Following the surfactant flood, Phase I of the post-SEAR water flood also used a graded flowrate scheme that deviated from the design flowrates. This change was implemented to sweep a similar pore volume of aquifer during the water flood (for recovery of surfactant and solubilized DNAPL) as was swept by the Phase II surfactant flood. Post-SEAR water flood flowrates were returned to design rates for Phase II of the water flood and remained constant thereafter for the remainder of the water flood and post-SEAR PITT.

The project was extended for a total of 24 days beyond the duration specified in the Demonstration Plan; specifically, there was a 10-day extension of the surfactant flood and a 14-day extension of the post-SEAR water flood. The surfactant flood was extended to recover additional DNAPL from the test zone, based upon an evaluation of analytical data and the continued observation of free-phase DNAPL in several wells. The post-SEAR water flood was extended to reduce the surfactant concentrations in the test zone to acceptable levels before starting injection of tracers for the post-SEAR PITT. These extensions to the duration of the demonstration were made because of a slower-than-expected response of the geosystem, which occurred because permeability in the basal silt layer was lower than originally anticipated.

3.3 Comparison of Measured Performance to Technology Claims

Due to the lack of prior SEAR field data under the exceptionally low aquifer permeability conditions that exist at Site 88, MCB Camp Lejeune, it is not possible to compare measured performance to technology claims. However, the 72% DNAPL removal efficiency demonstrated at Site 88 can be favorably compared to the 63% removal efficiency recently accomplished at the Sages Dry-Cleaning Site in Florida, where the average permeability was an order of magnitude higher than that at Site 88 (Jawitz et al., 2000). It is also possible to comment on the measured performance relative to the performance objectives stated in Section 2.1. The performance objectives for DNAPL removal were established based on a very successful application of SEAR at a site (Hill Air Force Base) (Brown et al., 1998) with up to two orders of magnitude higher permeability than that which exists at Site 88. Due to the more challenging hydrogeologic conditions at Site 88, both technical and budgetary limitations prevented these performance objectives from being accomplished. A combination of the shallow depth to contamination and low permeability limited the hydraulic gradients that could be applied to the site, which prolonged the field time required to flush surfactant through the contamination zone.

For example, at MCB Camp Lejeune, the travel time for surfactant solution to move a distance of 15 ft was 12 days, compared to <1 to 4 days at a more ideal site with higher permeability. Although the surfactant flooding at Site 88 was extended by 11 days, it was evident that, when surfactant flooding was terminated, PCE concentrations were still elevated as a result of surfactant flooding in several of the extraction wells as shown in Figure 3-4. This result indicated that DNAPL remaining in the test zone continued to be solubilized by the surfactant flood; however, the demonstration budget did not permit further extension of surfactant flooding. The ineffectiveness of surfactants to remediate the bottom zone was due to a combination of the high permeability contrast and the low absolute permeability, neither of which were adequately quantified during remedial design activities. Given the expected permeability contrast of 5:1 prior to the SEAR, the design approach used for the basal silt layer was to increase the number of surfactant flood pore volumes from three to five in order to sweep the low-permeability zone. This decision was supported by design simulations that indicated an effective sweep under these conditions with five pore volumes. The results of the SEAR demonstration showed that this design did effectively remediate the upper portions of the basal silt layer where permeability contrast range is about 3:1 to 5:1. However, the design was unable to accommodate the greater permeability contrast of 10:1 that actually existed in the aquifer; hence DNAPL removal was reduced to 72% from the original target of 96%. In the future, a robust SEAR design that uses mobility control measures to overcome the tendency of SEAR fluids to preferentially flow through zones of higher permeability is highly recommended when

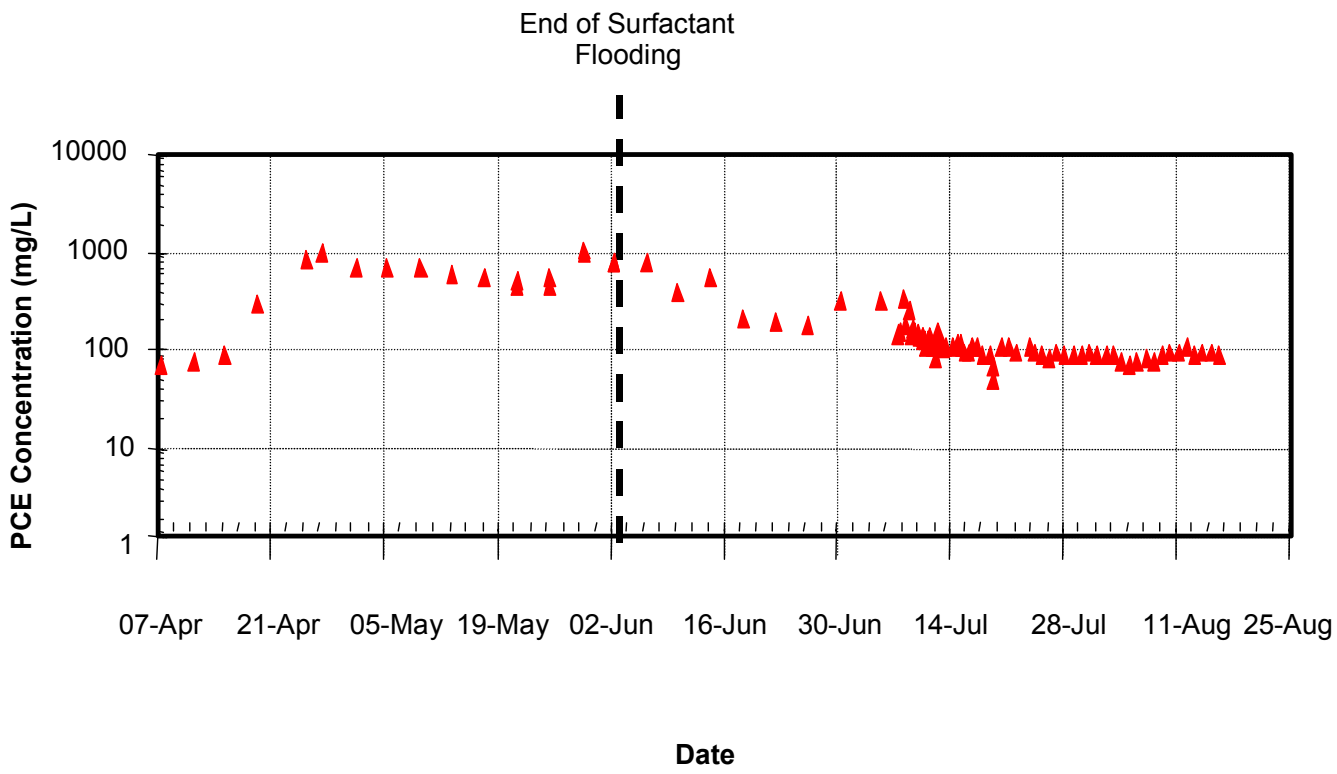

DATE: 3/28/00	History of PCE Concentration at Extraction Well EX04R
REF: 00293.00.0002.00.00000	
FILE: Fig4-4. ppt	
Duke Engineering & Services A Duke Energy Company	Site 88, MCB Camp Lejeune, NC

Figure 3-4. History of PCE Concentration at Extraction Well EX04R

hydrogeologic conditions are not limiting. At Camp Lejeune, the combination of shallow and low permeability conditions restricted the use of mobility control measures; therefore SEAR performance was reduced because of the limited range of the hydraulic gradients that could be applied, as well as the budget available for establishing the flooding duration.

The low permeability of the basal silt also influenced the effectiveness of the PITT conducted at MCB Camp Lejeune. The poor sweep of the tracers through the basal silt layer tended to result in an underestimate of the DNAPL volume during the initial PITT. The final PITT data was rendered unusable due to the interference of a sorbed surfactant impurity that caused false tracer partitioning (i.e., partitioningto surfactant rather than DNAPL). There were several reasons that the sorbing effects of the surfactant impurity on the post-SEAR tracers were not discovered prior to field implementation. The first reason is that during the PITT tracer selection process, tracers were noted to sorb at low levels even to clean Camp Lejeune soils due to the occurrence of relatively high sedimentary organic carbon content (i.e., f_{oc} in the sediments), as documented in the pre-SEAR PITT report. Thus, even though some tracer retardation was observed during post-SEAR tracer testing that followed surfactant flooding of soil columns, it was misattributed to this background phenomena. Secondly, with the special effort devoted to the development of a custom surfactant to meet project objectives, funds and resources to examine effects such as surfactant impurities were very restricted. Finally, it should be mentioned that any sorption effect noted in the laboratory was aggravated in the field due to the lengthened residence time (average 12 days) in the low permeability Camp Lejeune soils.

The performance objective for hydraulic control, which stated that a minimum of 90% recovery of injected chemicals would be recovered, basically was accomplished, with 88% recovery of IPA from the subsurface. Elevated IPA concentrations from the middle-zone sampling points at the end of the SEAR test suggested that the main reason for IPA losses is incomplete recovery from the lower-permeability middle zones within the time frame of the project. The lower surfactant recovery of approximately 78% (relative to IPA) is hypothesized to have been caused by late-time sorption and/or biodegradation of surfactant, as can be seen in Figure 3-5. The reason for this is the supporting evidence that hydraulic control was maintained (see Section 3.1.1) as well as evidence of surfactant sorption from the results of the final PITT. Because the surfactant is biodegradable (DE&S, 1999b), it is likely that once sorbed it would tend to biodegrade, but there is no evidence to verify that this occurred. It should be noted that no surfactant has been previously evaluated under such extended periods in the field; therefore, it is not possible to compare the performance of the custom MCB Camp Lejeune surfactant to the surfactants used at other sites, with respect to biodegradability. Finally, during the final PITT, 82 ±5% tracer recovery was accomplished, which is comparable to the 85 ±3% tracer recovery obtained during the initial PITT.

More generally, the MCB Camp Lejeune SEAR demonstration has shown that SEAR can be implemented in such a fine-grained, low-permeability aquifer as Site 88 without causing any aquifer plugging. This potential concern was addressed during the design stage by including alcohol in the surfactant formulation, as well as by using calcium as the sole electrolyte to prevent the mobilization of clay fines. This combination was successful as the SEAR demonstration was completed with no measurable loss of permeability from surfactant injection.

The surfactant recovery work performed at Camp Lejeune also was unique to this ESTCP demonstration. Although both pervaporation and ultrafiltration have been used in the past to treat contaminated groundwater, neither has ever been applied to the treatment train used at Site 88. A discussion of field performance relative to performance objectives for the aboveground surfactant recovery processes is provided in Section 3.1.2.

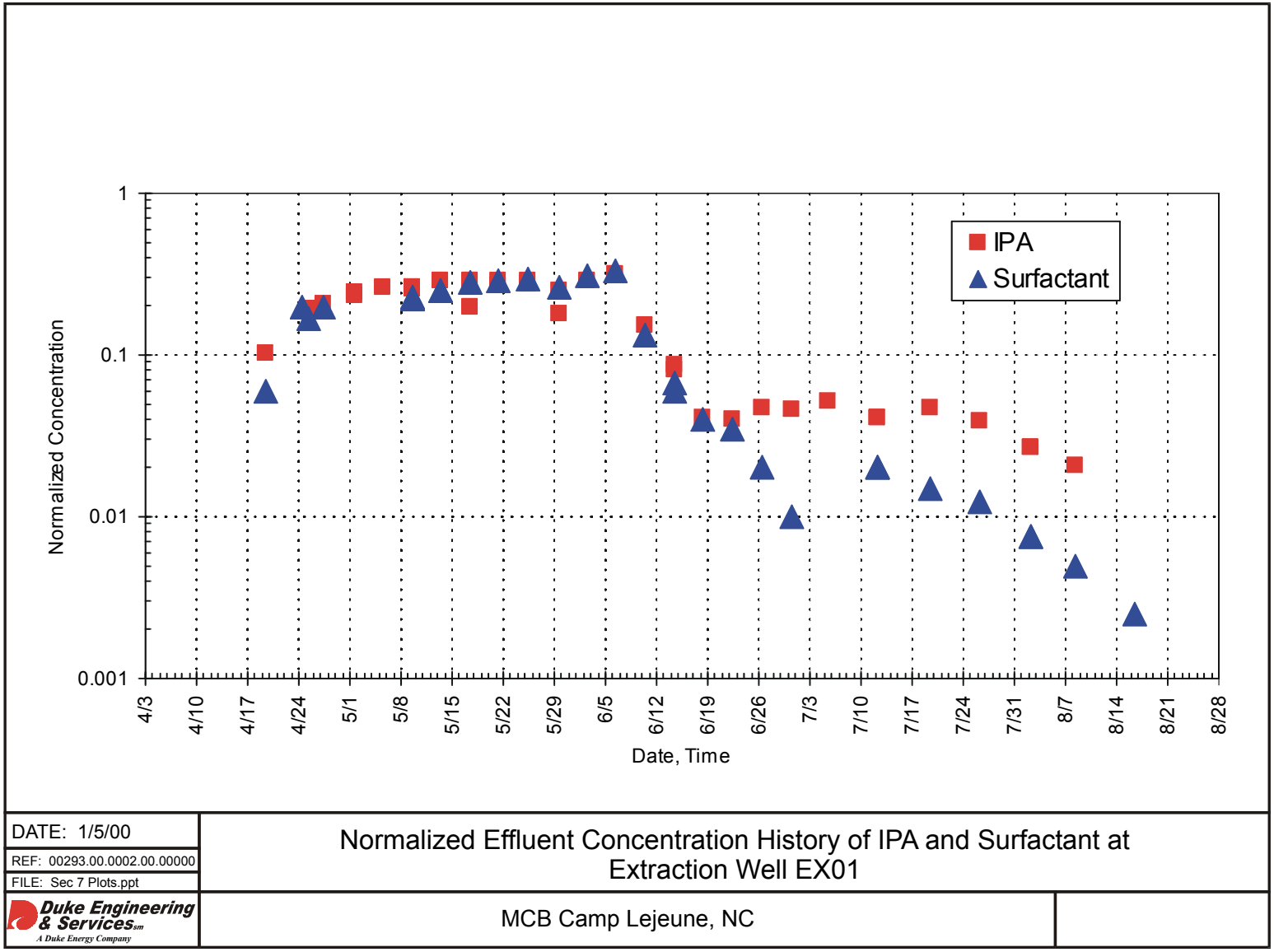

Figure 3-5. Normalized Effluent Concentration History of IPA and Surfactant at Extraction Well EX01

Section 4.0: COST ASSESSMENT

This section provides (1) a summary of the actual costs of the ESTCP demonstration and (2) the application of the results of the ESTCP demonstration to develop a design concept and cost estimate for full-scale application of SEAR for DNAPL cleanup at Site 88, MCB Camp Lejeune. Actual costs for the ESTCP demonstration include those that are associated with the remediation of DNAPL. Costs that are specific to the requirements of the ESTCP demonstration rather than application of the technology (such as validation efforts) are not included. Because full-scale SEAR application at Site 88 encompasses a very small area of only approximately 2,500 ft^2, and full-scale application at other sites will likely address larger source areas, full-scale SEAR costs were also developed for two larger scenarios: 0.5 acre and 1.0 acre. In addition, because surfactant-flooding costs are sensitive to the permeability of the contaminated aquifer, parallel cost estimates also were developed for a high permeability site (K = 10^{-2} to 10^{-3} cm/sec) with all other site variables similar to Camp Lejeune. For simplicity, the cost comparison of alternative DNAPL remediation technologies was performed only for the actual DNAPL source area, i.e., 2,500 ft^2, and actual site conditions at MCB Camp Lejeune.

4.1 Summary of Treatment Costs

The ESTCP demonstration involved the setup and operation of three injection wells, two hydraulic control wells, and six extraction wells. Remediation operations for the demonstration included a pre-SEAR water flood (8 days), surfactant flood (58 days), and post-SEAR water flood (74 days including the 40-day post-SEAR PITT). The aquifer zone with the highest DNAPL saturation was the 3-4 ft (0.91-1.22 m) above the aquitard. The surfactant solution was injected into the DNAPL-contaminated zone while water was also injected simultaneously into the upper portion of the aquifer for upper hydraulic containment, i.e., to direct the flow of surfactant through the most contaminated region. The site conditions are summarized in Table 4-1, and the costs that are directly related to the site remediation aspects of the demonstration are shown in Table 4-2.

4.2 Scale-Up Recommendations

The conclusions from the ESTCP SEAR demonstration at Site 88, MCB Camp Lejeune (Section 3.0) and the performance observations and lessons learned (Section 5.2) were used as a basis for examining the viability of a full-scale application of SEAR technology to remediate the DNAPL-contaminated saturated zone at the site.

Table 4-1. Demonstration Conditions at Site 88, MCB Camp Lejeune

Parameter	Value
Area remediated	600 ft^2 (55.7 m^2)
Depth to aquitard	18-20 ft (5.5-6.1 m) bgs
Depth to groundwater	7-9 ft (2.1-2.7 m) bgs
Porosity of aquifer	0.3
Hydraulic conductivity of the DNAPL zone[(a)]	1.42 ft/day (5×10^{-4} cm/sec) for the upper 3 ft of the DNAPL zone (and for the rest of the saturated zone above), 0.28 ft/day (1×10^{-4} cm/sec) for the middle 1 ft, and 0.14 ft/day (5×10^{-5} cm/sec) for the bottom 1 ft
Aquifer thickness	11 ft (3.4 m)
Swept pore volume	Approx. 6,000 gal (22,700 L)
Amount of DNAPL removed	76 ±9 gal (288 ±34 L)
Amount of DNAPL remaining	29 ±9 gal (110 ±34 L)

(a) Based on post-SEAR history match (i.e., data fitting) simulations and post-SEAR grain-size analyses.

Table 4-2. Costs Incurred for SEAR Treatment Activity During the ESTCP Demonstration at Site 88, MCB Camp Lejeune

Item	Item Cost ($)
WBS 4.07, 4.08, and 4.09 – DNAPL-Source Zone Characterization: Includes site selection, pre-existing data review, 31 Geoprobe® and 10 CPT pushes for geologic logging and soil sampling, preservation and VOC analysis of 82 soil samples, installation of 3 wells, aquifer testing, ground-water sampling and analysis, data analysis, preliminary geosystems modeling, and disposal of investigation-derived waste.	131,900
WBS 4.04 – Surfactant Selection: Includes phase behavior testing, soil column testing, and $15,000 for in-kind custom surfactant testing.	108,000
WBS 4.04 – Pre-SEAR PITT Design: Includes tracer selection (partition coefficient measurement, soil column testing), PITT design and modeling, and preparation of PITT work plans.	65,500
WBS 4.23.05 – Well Field Installation: Includes 15 wells (3 injection, 6 extraction, 2 hydraulic control, 3 DNAPL recovery, and 1 extraction well replacement) and 6 MSLs to be used for PITT and SEAR demonstration; materials, equipment, and labor (including $4,100 in-kind contribution); waste management; and collection and VOC analysis of 31 soil samples.	81,600
WBS 4.23.05 – Free-Phase Removal: Includes equipment procurement, system installation and 54 days of free-phase DNAPL recovery. Based on the minimal amount of DNAPL recovered, only a scaled-down DNAPL recovery effort is recommended for full-scale operations at sites with similarly low permeabilities. Free-phase recovery may be accomplished as part of the CITT or pre-SEAR water flood.	134,000
WBS 4.23.05 – CITT and Pre-Sear PITT: Includes mobilization, system setup, shakedown, and demobilization; 14 days of CITT testing and 7 days of interim water flooding to maintain CITT hydraulic conditions for PITT; sampling and field analysis of Br; update of geosystems model based on CITT results; 40 days of pre-SEAR PITT operation; sample analysis; wastewater treatment and utilities ($60,069 in-kind contributions); and data analysis and reporting. Estimated cost for CITT only is $72,000.	460,000
WBS 4.23.05 – SEAR Demonstration: Includes installation of test zone monitoring points (most SEAR well installation costs included under well installation category above), mobilization, setup, and shakedown. Also includes operation of the SEAR (including $75,000 in-kind labor for pervaporation field operations), chemical costs ($68,791), post-SEAR water flood, post-SEAR PITT ($143,000), wastewater treatment and utilities ($75,105 in-kind contribution), hazardous waste disposal, chemical analysis ($107,000), post-SEAR soil sampling (60 VOC samples) (includes $5,100 in-kind contribution), work plans, data analysis and reporting ($120,000), and demobilization.	1,208,000
WBS 4.26.44, 4.26.45 – Surfactant Regeneration Costs: MEUF equipment development and field labor; pervaporation equipment development and field labor.	820,500
WBS 4.01 and 4.02 Indirect Costs: NFESC project management.	65,000
SEAR Demonstration Total Cost	**3,074,500**

(a) CITT = conservative interwell tracer test.

4.2.1 Concepts for Full-Scale Applications. Although most system specifications used in the full-scale estimates are identical to what was employed in the Camp Lejeune demonstration, several modifications have been made to take advantage of recent technology advancements. For example, significant progress has been made in the development of customized surfactants since the Camp Lejeune demonstration, including the improved tailoring of surfactants to PCE. Surfactants such as the Alfoterra 123-8PO sulfate™ have been used in the field for Navy special fuel oil (NSFO) and coal tar removal, and show improved microemulsion viscosity compared to Alfoterra 145-4PO sulfate™ which was used at Camp Lejeune. Both of the named contaminants are highly viscous; for example, the viscosity of NFSO at 61°C is 150 centipoise (cp), while the viscosity of coal tar at 38°C is 32 cp, in comparison to PCE which has a viscosity of 0.9 cp at 25°C. Yet, the cosolvent requirement for the NFSO and coal tar floods did not exceed 8 wt% IPA. This is a 50% reduction in IPA content, as compared to the 16 wt% IPA requirement

for PCE using Alfoterra 145-4PO sulfate™. A new surfactant, the Alfoterra I12-3PO sulfate™, has been especially tailored for PCE and displays much improved phase behavior and viscosity in comparison to the Alfoterra 145-4PO sulfate™ due to the uniformity of and decreased carbon length of the surfactant tail[1]. For this reason the full-scale SEAR estimates assume the use of Alfoterra I12-3PO sulfate™ and no more than 8 wt% IPA. It is possible that as little as 4 wt% IPA could be used; however, this requires additional laboratory testing with the Camp Lejeune DNAPL and soils.

Another innovation that has been included in the SEAR full-scale estimates is the use of chemical metering pumps and in-line mixing for surfactant injectate preparation. This avoids manual chemical measurements for improved accuracy of the surfactant composition and reduced labor costs, and minimizes the required tankage capacity for reduced construction costs when the remediation is sufficiently large. Additionally, an on-line gas chromatograph (GC) has been added for the analysis of organic contaminants. This is a GC, which has been customized with a stream selector and sampling ports such that fluids from extraction wells and other monitoring points can be directly injected onto the GC column. Surfactant injectate can also be directly plumbed into an on-line GC for the analysis of cosolvent concentrations (or contaminant concentrations in the case of recycled surfactant). Surfactant fouling of the packed GC column is avoided through the use of a GC precolumn that is periodically replaced. These can be purchased for certain GC models or can be "handmade" using stainless steel tubing filled with deactivated glass. The use of an on-line GC not only significantly reduces analytical costs, but also reduces the error involved in sample collection and transport. Finally, where applicable, mobility control measures were incorporated into the SEAR design; this is discussed further below.

Unlike an aboveground treatment system, where scaling up involves increasing the size of the equipment to handle larger volumes of feed, an in situ treatment system must be scaled up by taking into account the subsurface characteristics of the aquifer region being treated. The area to be treated is an irregular oval about 95 ft (29 m) long and 35 ft (10.7 m) wide with an area of approximately 2,500 ft^2 (232 m^2). The well arrangement to cover this area (Figure 4-1) was developed using the same well configuration (i.e., pattern and spacing) that was applied in the demonstration; this involved 14 injection wells, 24 extraction wells, 8 hydraulic control wells, and 7 monitoring points. The full-scale cost estimate is based on the results of the ESTCP demonstration, but includes costs for all activities needed to remediate the site, including the assumption that no DNAPL-related work has been done at the site. Thus, the full-scale estimate includes DNAPL source zone characterization, limited free-phase DNAPL recovery, performance assessment, surfactant selection, and a pilot SEAR test. It also includes the cost of wastewater treatment with the assumption that there is no preexisting wastewater treatment plant at the site.

The higher permeability scenario uses fewer wells, with a greater interwell distance between injection and extraction wells (55 ft compared to 15 ft for the lower permeability scenario); with this geometry, the remediated area is slightly larger, at 3,333 ft^2. In total there are 3 injection wells, 6 extraction wells and 2 hydraulic control wells and 8 monitoring points (Figure 4-2). The wastewater treatment processes are scaled to accommodate a higher extraction rate of 18 gpm, compared to the 6 gpm extraction rate for the low permeability system. All other system components are identical to those used in the low permeability estimate. Another important design feature is that the high permeability SEAR employs polymer for mobility control, which considerably reduces the surfactant requirement. The addition of approximately 500 mg/L xanthan gum polymer to the surfactant formulation to form an injectate of increased viscosity is the typical use of polymer for mobility control and was the design basis for the high-k mobility control floods. This option is not available for the low permeability scenario because of the limited range of available hydraulic gradients in a shallow aquifer to drive the viscous polymer solution through the low permeability formation.

[1]The I12 refers to a single tail length with 12 carbons, whereas 145 refers to a tail length that is a mixture of 14 and 15 carbons.

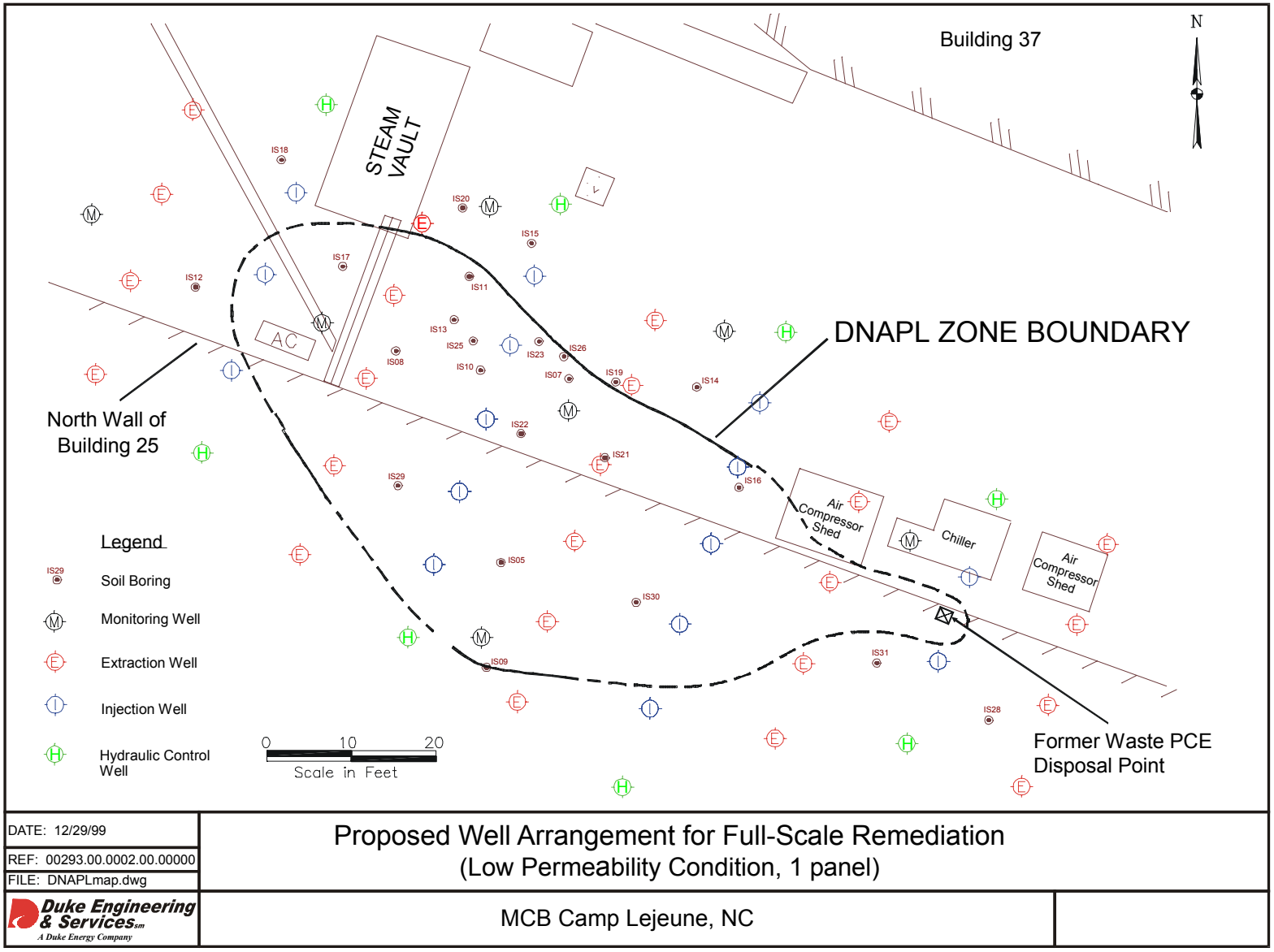

DATE: 12/29/99	Proposed Well Arrangement for Full-Scale Remediation (Low Permeability Condition, 1 panel)
REF: 00293.00.0002.00.00000	
FILE: DNAPLmap.dwg	
Duke Engineering & Services A Duke Energy Company	MCB Camp Lejeune, NC

Figure 4-1. Proposed Well Arrangement for Full-Scale SEAR Remediation (Low Permeability Condition)

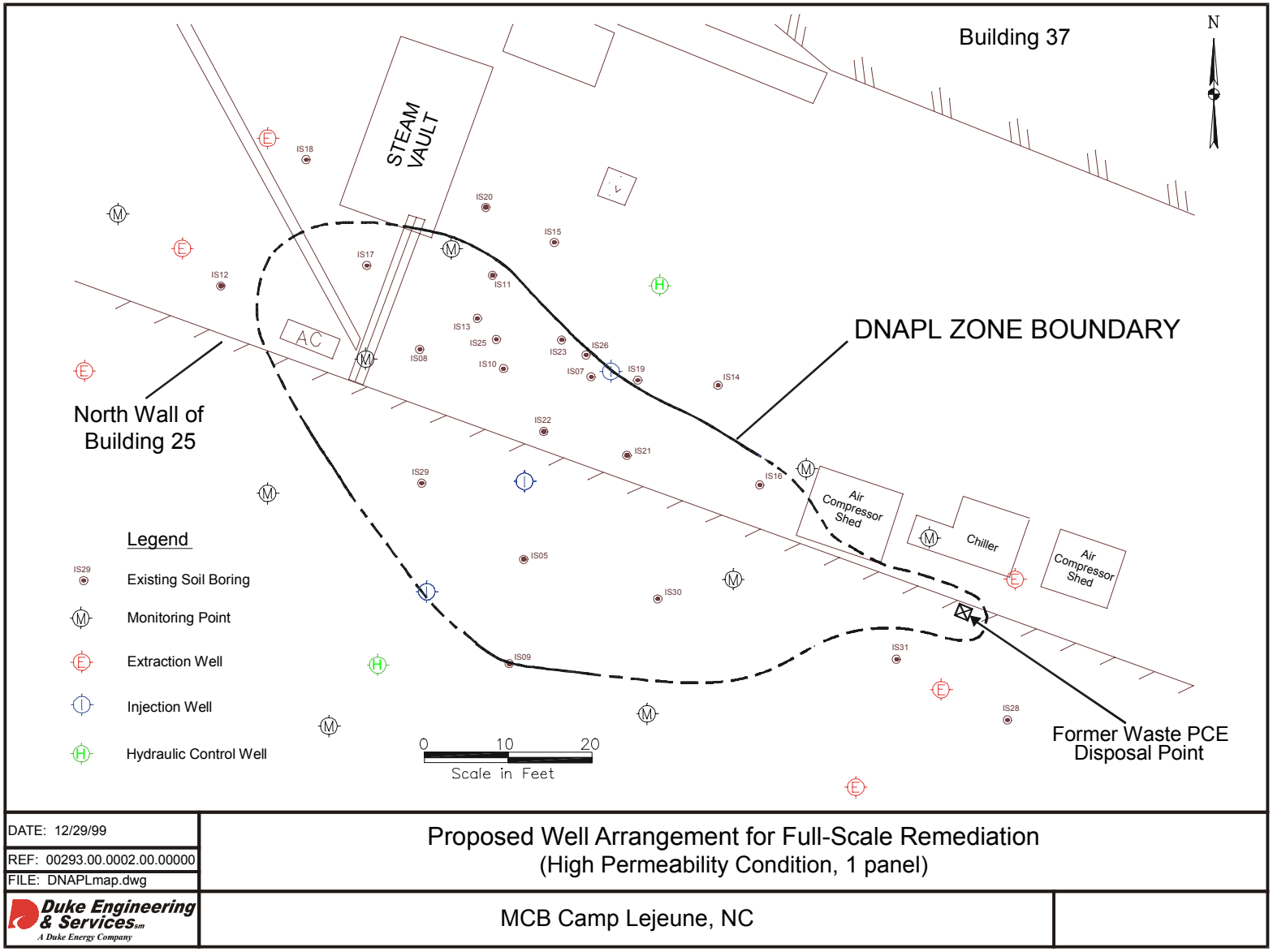

Figure 4-2. Proposed Well Arrangement for Full-Scale SEAR Remediation (High Permeability Condition, One Panel)

At sites where abundant free-phase DNAPL is present in pools or pockets, a properly designed water flood will mobilize and recover significant volumes of DNAPL. The effectiveness of water flooding to remove free-phase DNAPL is a function of both the permeability in the DNAPL zone and the viscosity of the DNAPL. If the permeability and viscosity are suited to free-phase recovery via water flooding, then SEAR should be preceded by a water flood to remove any easily recoverable mobile DNAPL. The surfactant flood is then initiated to remove DNAPL that is trapped in pores after any mobile DNAPL is flushed out by water flooding. During the ESTCP demonstration, a dedicated free-phase DNAPL recovery effort lasting 55 days was attempted and was relatively unsuccessful in recovering significant quantities of DNAPL due to the low permeabilities at Site 88. Therefore, a limited DNAPL recovery effort is recommended for future SEAR operations at Site 88. In the full-scale cost estimates, it was assumed that a limited free-phase DNAPL recovery effort by water flooding could be conducted in tandem with conservative interwell tracer test (CITT) operations; furthermore, water flooding operations to be conducted during the CITT were extended by approximately one pore volume to accommodate this effort.

The pilot SEAR test that is included in all full-scale cost estimates assumes the use of one injection well, two extraction wells and two hydraulic control wells. The interwell spacing between the injection and extraction wells is half the distance used in the full-scale SEAR application. The flooding durations are also shortened in comparison to the full-scale flood: one pore volume of surfactant flooding is followed by three pore volumes of postsurfactant water flooding (compare to values for the full-scale SEAR in Table 4-3).

Table 4-3. Required Phases and Durations for Full-Scale SEAR Application under Low Permeability (k) or High Permeability (k) Conditions at a Site Similar to Site 88, MCB Camp Lejeune

	CITT and NAPL Recovery Duration[(a)] (PV/Total Days)	Initial Water Flood Duration (PV/Total Days)	Surfactant Flood Duration (PV/Total Days)	Final Water Flood Duration (PV/Total Days)
Low k	3 PV (20 days)	1 PV (7 days)	5 PV (58 days)	8 PV (62 days)
High k[(b)]	3 PV (9 days)	1 PV (4 days)	2 PV (8 days)	3 PV(12 days)

(a) These are required pre-SEAR design and site preparation activities.
(b) The SEAR design for the high-k scenarios include mobility control measures.

Using either the 2,500 or 3,333 ft^2, which represents the low- or high-k treatment areas, respectively, for the entire DNAPL contamination at Site 88, as the basic remediation unit, scaled-up cost estimates were obtained for a hypothetical cleanup of a 0.5- and 1.0-acre DNAPL source zone. The costs for the low and high permeability scenarios at each of the three scales (i.e., three high-k and three low-k conceptual field scales) are summarized in Section 4.2.2, and further details of these cost estimates are included in Appendix B. The phases required to implement full-scale SEAR remediation at Site 88, MCB Camp Lejeune, are summarized in Table 4-3 for both the low permeability and high permeability surfactant floods. Note that for each, the number of pore volumes flooded is identical; however the overall duration of the high permeability surfactant flood is shorter due to the higher achievable flowrates and the use of mobility control. The use of PITTs for DNAPL source zone characterization and performance assessment was considered optional and therefore not included in the design of the full-scale SEAR for which costs were developed; details of the required test durations are presented in Table 4-4. Note that these durations are based upon the Camp Lejeune PITTs, which resulted in an underestimate of the DNAPL volume due to low tracer recoveries from the low-permeability basal silt layer. To obtain a more accurate DNAPL volume estimate, mobility control measures may be required to force tracers through the

Table 4-4. Optional Phases for Full-Scale SEAR Application at a Site Similar to Site 88, MCB Camp Lejeune

	Pre-SEAR PITT Duration (PV/Total Days)	Post-SEAR PITT Duration (PV/Total Days)
Low k	7.5 PV (46 days)	7.0 PV (40 days)
High k	7.5 PV(22.5 days)	7.0 PV (21 days)

lower permeability zones. It should be noted that at the larger 0.5- and 1.0-acre scales, the application of PITTs at the scale of the entire DNAPL treatment zone becomes cost prohibitive; however, they may be conducted for a subsection of the entire plot to obtain valuable remedial design information (e.g., DNAPL saturation and volume as measured within a significant volume of the aquifer). Thus Table 4-4 is still applicable at these larger scales. PITT costs are discussed in Section 4.2.2.

The full-scale remediation assumes conventional wastewater treatment by air stripping to remove PCE from the extracted groundwater, followed by biological treatment of the air stripper bottoms to remove oxygen demand caused by the alcohol and surfactant. Volatile contaminants in the off-gas from the air stripper are burned in a catalytic oxidation unit, which are followed by a caustic scrubber to remove acidic gases formed by the combustion of chlorinated hydrocarbons. Inorganic salts are assumed to be within the total dissolved solids limits for disposal. This treatment train is an accepted approach for using mature commercial technologies to treat groundwater extracted during SEAR (Lowe et al., 1999a). It is a conservative design based on the assumption that there is no on-site facility available for wastewater treatment, and that air stripper emissions are regulated. The equipment concept for the full-scale system is shown in Figure 4-3.

Additionally, for each scale of application, and for both high and low permeability conditions, costs were developed for surfactant recovery treatment to evaluate potential cost savings associated with material reuse. It was again assumed that no existing wastewater treatment facilities exist to handle any primary or secondary wastestreams produced during SEAR operations. Therefore the design of the surfactant recovery treatment system does not replace the conventional wastewater treatment system, but rather includes it for processing secondary wastestream surfactant recovery operations. The only exception is that the air stripper off-gas treatment system is no longer necessary when surfactant recovery equipment is added. Details of the surfactant recovery treatment train are provided with the surfactant recovery costs presented in Section 4.2.2.2.

Finally, although the underlying assumption for each cost estimate is that SEAR performance will be comparable to what has already been demonstrated, it is almost certain that future SEAR applications would result in improved technology performance. This is especially true in the high permeability case, where mobility control using polymer in the SEAR design has the ability to overcome aquifer heterogeneities.

4.2.2 Cost Projections for Full-Scale Applications. In this section, costs associated with the six conceptual full-scale estimates (see Appendix B for cost details) discussed in Section 4.2.1 are provided. Detailed cost estimates assuming conventional wastewater treatment are presented in Section 4.2.2.1. The additional treatment costs and material savings available by applying with surfactant recovery are presented in Section 4.2.2.2. Costs for the optional PITTs are presented in Section 4.2.2.3.

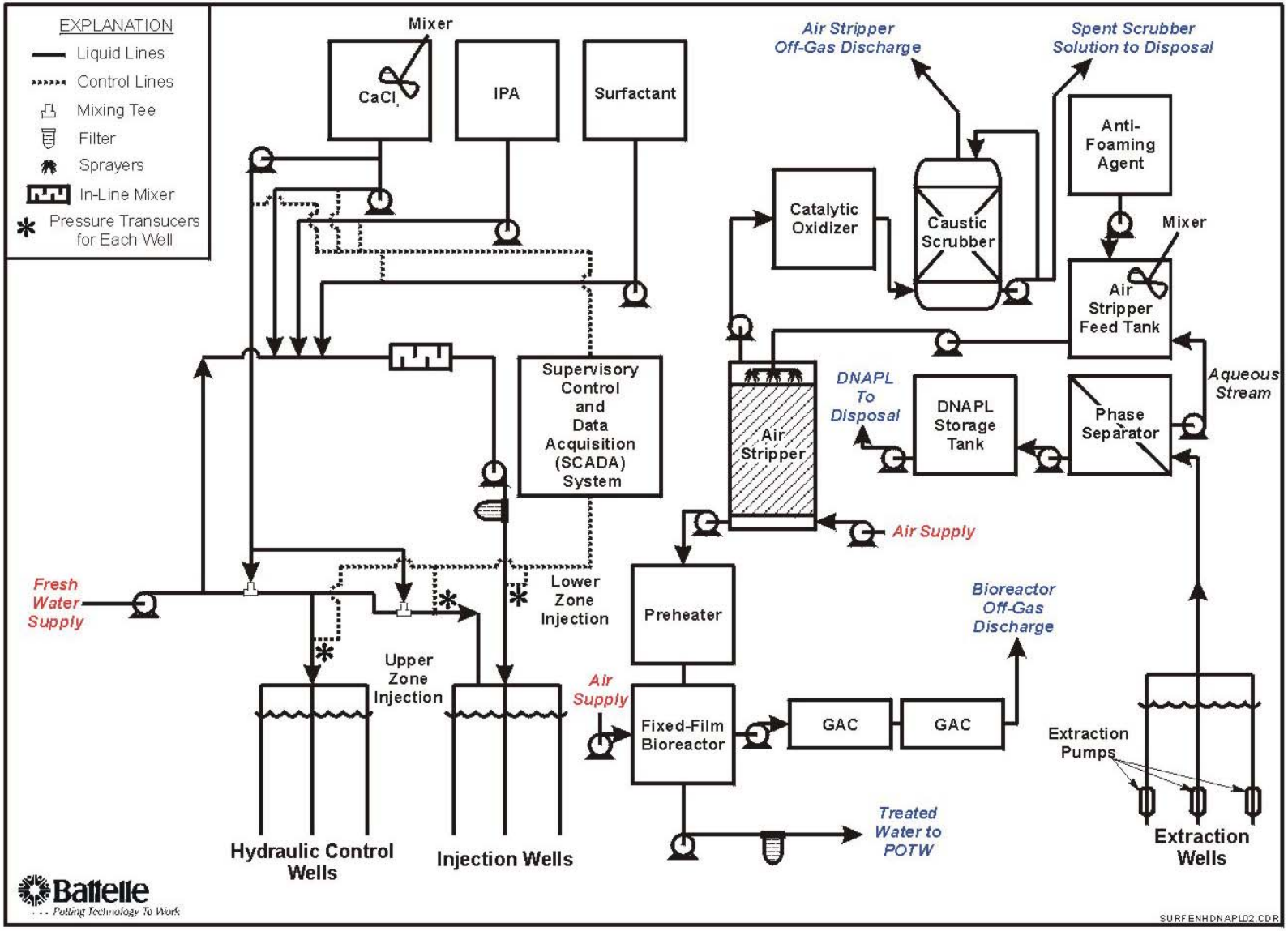

Figure 4-3. Conceptual Diagram of Full-Scale SEAR Using Conventional Wastewater Treatment

4.2.2.1 Conventional Wastewater Treatment. The costs for a full-scale SEAR system to remediate the entire DNAPL zone as well as at the larger hypothetical scales of 0.5 and 1.0 acre at Site 88, MCB Camp Lejeune, are summarized in Table 4-5. The costs were estimated using design and performance data determined by the SEAR demonstration for well spacing; injection, extraction, and hydraulic control well flowrates; solution compositions; and labor requirements. These data were used to determine the size of field equipment needed to conduct the full-scale surfactant flood. The cost estimating approach involves a comprehensive analysis of the full range of preconstruction activities, construction, operation and maintenance, and performance assessment. Costs for the equipment were determined from published unit price data (Talisman Partners and R.S. Means, 2000). The costs reflect conventional wastewater treatment by gravity separation, then air stripping followed by biological treatment of the unstripped organic contaminants (surfactant/IPA) and off-gas treatment of the VOCs. For a site with wastewater treatment facilities, the conventional wastewater treatment costs reflected in WBS Elements 4.26.30, 4.26.04, 4.34.05, 4.34.12 and 4.22.09 may be reduced or eliminated. Because the proposed remediation scheme involves SEAR treatment of a single panel at a time, it may be observed that the capital equipment costs for the wastewater treatment system do not increase with scale.

The high permeability SEAR scaled-up costs, presented again for the entire DNAPL source zone at Site 88, as well as at the larger 0.5- and 1.0-acre scales, can be viewed in Table 4-6. The high permeability SEAR design has a larger well spacing and therefore fewer wells, and results in a treatment area that is one-third larger than the 2,500-ft^2 footprint of the low permeability SEAR. The well spacing, flowrates and numbers of days per pore volume were adapted from a recently completed surfactant flood at Hill AFB operable unit 2 (OU2). The larger treatment volume at the smallest scale (one panel) should be considered in the comparison between the high-k and low-k SEAR costs at this scale; however, the one-panel high-k SEAR costs are still considerably lower than the one-panel low-k SEAR costs. The areal difference is accounted for at the larger scales by using a different number of treatment panels. Otherwise, the cost estimates use the same cost model and unit prices to ensure that the two estimates are directly comparable. Table 4-7 shows the cost of conventional wastewater treatment for both the low-k and high-k systems at each full-scale condition, as well as a percentage of the total project costs.

There is a significant decrease in SEAR costs when conducted at the 0.5- and 1.0-acre scales. The cost of the one-panel "unit" is reduced by almost 50% for the low-k system when implementing at the 1.0-acre scale. Similarly, the high-k system unit cost is reduced by > 50% for a 0.5-acre application and by >60% for a 1.0-acre application. The primary cost savings are due to the fixed design and construction costs with scale-up. Another cost benefit is the decrease in unit surfactant costs by 33% at the 0.5- and 1.0-acre scales because of the greater quantities purchased. Furthermore, it can be observed that there is a relative decrease in performance assessment costs at the 0.5- and 1.0-acre scales; this results from the assumption that it would be infeasible to engage in the same magnitude of intensive soil sampling at these scales for statistically accurate performance assessment. Still, the number of performance assessment borings selected at these larger scales, i.e., 160 and 320 borings for the 0.5- and 1.0-acre cost estimates respectively, is probably ample by comparison to the industry "standard".

In comparing Tables 4-5 and 4-6, it can be seen that permeability has a substantial influence on the SEAR cost. The low-k full-scale SEAR costs range from approximately 150% to 300% higher than the high-k full-scale SEAR costs depending on the scale of application. This is primarily reflected by higher costs in the following categories: CITT/free-phase recovery (preconstruction), well and pump installation (construction), labor, and chemicals (O&M). The higher preconstruction costs and SEAR labor costs are due to the extended flooding durations required of working in a shallow low permeability

Table 4-5. Projected Cost of a Full-Scale SEAR System for a Site Similar to Site 88, MCB Camp Lejeune

WBS Element	Item	Item Cost ($) for 2,500 ft^2 (1 panel)	Item Cost ($) for 0.5 acre (8 panels)	Item Cost ($) for 1.0 acre (16 panels)
Preconstruction Cost				
4.07, 4.08, and 4.09	DNAPL source zone characterization	47,400	155,500	277,600
4.04	Surfactant selection	25,000	25,000	25,000
4.04	Bench-scale treatment equipment testing	25,000	25,000	25,000
4.04	Preliminary field testing[(a)]	51,100	50,000	50,000
4.04	CITT/free-phase recovery	79,800	638,700	1,277,400
4.04	Engineering design and modeling	69,200	263,000	380,600
	Subtotal	*297,500*	*1,157,200*	*2,035,600*
Construction Cost				
4.05	Site preparation	18,500	18,500	18,500
4.26.30	DNAPL decanting tank system installation	10,400	10,400	10,400
4.26.04	Air stripping system	57,500	57,500	57,500
4.34.05 and 4.34.12	Off-gas treatment system	89,700	89,700	89,700
4.22.09	Air stripper bottoms biotreatment system	72,600	72,600	72,600
4.23.05	Well and pump installation	168,700	1,349,700	2,699,400
4.23.05	Aboveground piping installation	49,200	49,200	49,200
4.23.05	Chemical addition system installation	20,600	20,600	20,600
4.33	Disposal of drill cuttings	1,900	15,400	30,700
4.05	Site restoration	3,000	23,800	47,500
	Indirect Capital[(b)]	147,600	512,200	928,900
	Subtotal	*639,700*	*2,219,600*	*4,025,000*
Operations and Maintenance Cost				
5.23.05	Chemical cost	245,300	1,401,700	2,803,300
5.23.05	Labor cost	169,500	1,355,600	2,711,200
5.07, 5.08, and 5.09	Analysis cost	71,200	328,400	622,300
5.23.05	Utilities/miscellaneous cost	16,100	128,600	257,200
	Subtotal	*502,100*	*3,214,300*	*6,394,000*
Performance Assessment Cost				
	Performance assessment	*103,700*	*177,300*	*324,700*
Full-Scale SEAR System Total Cost		1,543,000	6,768,400	12,779,300

(a) This assumes that no previous pilot testing of SEAR, such as the completed ESTCP demonstration, has been conducted at the site.
(b) Field supervision, quality assurance, health and safety support, overhead and administrative, and contingency.

Table 4-6. Projected Cost of a Full-Scale SEAR System for a High Permeability Site With All Other Parameters Similar to Site 88, MCB Camp Lejeune

WBS Element	Item	Item Cost ($) for 3,333 ft^2 (1 panel)	Item Cost ($) for 0.5 acre (6 panels)	Item Cost ($) for 1.0 acre (12 panels)
Preconstruction Cost				
4.07, 4.08, and 4.09	DNAPL source zone characterization	47,400	155,500	277,600
4.04	Surfactant selection	25,000	25,000	25,000
4.04	Bench-scale treatment equipment testing	25,000	25,000	25,000
4.04	Preliminary field testing [a,c]	42,000	40,900	40,900
4.04	CITT/free-phase recovery	28,800	173,000	346,000
4.04	Engineering design and modeling	69,200	207,600	297,600
	Subtotal	*237,400*	*627,000*	*1,012,100*
Construction Cost				
4.05	Site preparation	18,500	18,500	18,500
4.26.30	DNAPL decanting tank system installation	10,400	10,400	10,400
4.26.04	Air stripping system	67,900	67,900	67,900
4.34.05 and 4.34.12	Off-gas treatment system	89,700	89,700	89,700
4.22.09	Air stripper bottoms biotreatment system	97,100	97,100	97,100
4.23.05	Well and pump installation	50,400	302,600	605,100
4.23.05	Aboveground piping installation	22,400	22,400	22,400
4.23.05	Chemical addition system installation	20,600	20,600	20,600
4.33	Disposal of drill cuttings	700	4,100	8,300
4.05	Site restoration	800	4,600	9,200
	Indirect capital cost[b]	113,600	191,400	284,800
	Subtotal	*492,100*	*829,300*	*1,234,000*
Operations and Maintenance Cost[c]				
5.23.05	Chemical cost	135,700	589,900	1,179,800
5.23.05	Labor cost	31,800	190,600	381,200
5.07, 5.08, and 5.09	Analysis cost	30,800	110,200	188,900
5.23.05	Utilities/miscellaneous cost	11,200	67,400	134,800
	Subtotal	*209,500*	958,100	*1,884,700*
Performance Assessment Cost				
	Performance assessment	*103,700*	*177,300*	*324,700*
Full-Scale SEAR System Total Cost		1,042,700	2,591,700	4,455,500

(a) This assumes that no previous pilot-testing of SEAR, such as the completed ESTCP demonstration, has been conducted at the site.
(b) Field supervision, quality assurance, health and safety support, overhead and administrative, and contingency.
(c) These costs assume the use of polymer for mobility control.

Table 4-7. Cost of Conventional Wastewater Treatment for Full-Scale DNAPL Remediation at a Site with Parameters Similar to Site 88, MCB Camp Lejeune

Permeability	Conventional Wastewater Treatment Costs in $$ and Percent of the Total Project Costs		
	1 panel	0.5 acre	1.0 acre
Low k	$ 394,500 (26%)	$ 879,300 (13%)	$ 1,433,500 (11%)
High k	$ 392,200 (38%)	$ 456,100 (18%)	$ 632,200 (14%)

system. The higher construction costs can be attributed to the significant well and pump requirements for the low-k SEAR relative to the high-k SEAR – increased well requirements can be observed by comparing Figures 4-1 and 4-2. The higher chemical costs are due to the high permeability contrast and limitations to applying mobility control measures at this site. The chemical cost savings with mobility control can be estimated by comparing the chemical costs of the low-k SEAR application (without mobility control) to the chemical costs of the high-k SEAR application (with mobility control) at the 0.5- and 1.0-acre scales. This reveals a 59% reduction in chemical costs with mobility control, which is significant. Additionally, although the exact cost savings are not obtainable from the information provided in Tables 4-5 and 4-6, Table 4-8 shows that under high-k conditions, the use of mobility control cuts the required field time by almost 50%. Due to these economic benefits, and the necessity to improve performance with respect to the negative influence of heterogeneities, it is recommended that mobility control be incorporated into future SEAR designs.

Table 4-8. Comparison of Flooding Durations for Full-Scale SEAR Application under Low Permeability or High Permeability Conditions at a Site Similar to Site 88, MCB Camp Lejeune, NC

	Initial Water Flood Duration (PV/Total Days)	Surfactant Flood Duration (PV/Total Days)	Final Water Flood Duration (PV/Total Days)	Total SEAR Duration (Total Days)
Low k	1 PV (7 days)	5 PV (58 days)	8 PV (62 days)	127 days
High k	1 PV (3 days)	5 PV (15 days)	8 PV (24 days)	42 days
High k w/mobility control[(a)]	1 PV (4 days)	2 PV (8 days)	3 PV(12 days)	24 days

(a) The high k mobility control design assumes equivalent if not superior performance to the high k system that does not use mobility control.

4.2.2.2 Surfactant Recovery and Reuse. In addition to the conventional wastewater treatment, SEAR effluent treatment for the recovery of surfactant was evaluated to determine the cost benefit available by recovering and reusing surfactants. This was conducted for both the low and high permeability scenarios and for all three full-scale applications, i.e., approximately 3,000 ft^2, 0.5 acre, and 1.0 acre. The treatment train used for developing surfactant recovery costs includes nearly all of the same equipment used in the conventional wastewater treatment as well as additional processes to recover surfactant (Figure 4-4). This design was necessary because during surfactant recovery operations, the UF process wastestream (UF permeate) contains PCE, alcohol, and surfactant at concentrations, which might not be acceptable for direct discharge. In addition, the UF system will only be operated when surfactant concentrations are high enough to permit efficient surfactant recovery. During the other periods, the SEAR effluent will contain surfactant at concentrations, which may also necessitate treatment. At the same time, it is not desirable to return the UF wastestream to the head of the surfactant recovery process treatment train for further contaminant removal as it would result in a dilution of the surfactant that is being concentrated downstream.

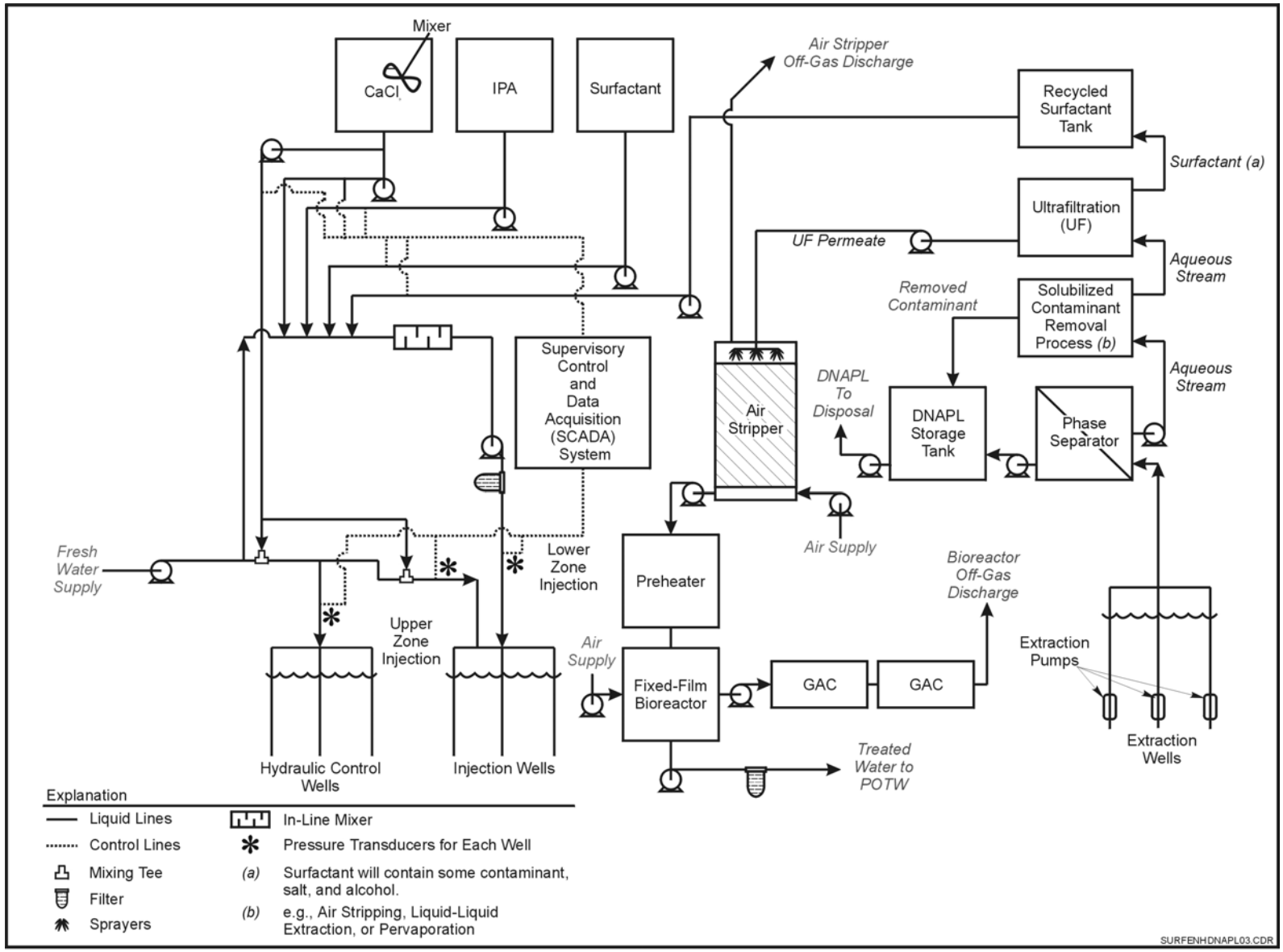

Figure 4-4. Conceptual Diagram of Full-Scale SEAR System with Surfactant Recovery

The basic premise of the surfactant recovery design is that for remediations larger than one panel, the recovered surfactant for the remediation of a given panel will be applied to the injection of the next (with the exception of the last panel). For a single panel remediation, surfactant that is recovered is reinjected as part of the overall surfactant requirement for that panel, as done at Camp Lejeune. Once again, it was assumed that there are no existing on-site wastewater treatment facilities to handle any primary or secondary wastestreams produced during SEAR operations. Therefore the design of the surfactant recovery treatment system presented herein includes the previously discussed conventional wastewater treatment system for processing secondary wastestreams generated during surfactant recovery operations. The only difference is that the air stripper off-gas treatment system from a conventional system is no longer necessary when surfactant recovery equipment is added.

In designing the surfactant recovery system, lease costs were assumed for remediations lasting six months or less, while newly purchased equipment costs were assumed for longer-term remediations. Three options were evaluated for separating contaminant from surfactant: air stripping without antifoam addition (with off-gas treatment), liquid-liquid extraction by a macroporous polymer process commercially available from Akzo Nobel, and pervaporation. Both air stripping without antifoam addition and the macroporous polymer extraction (MPPE) system have been field tested by Surbec-Art Environmental for decontaminating SEAR wastestreams during a surfactant flooding operation; therefore, the assistance of Surbec-Art Environmental was retained for generating the costs for applying these processes. Separate estimates for the MPPE system were obtained directly from Akzo Nobel. In comparing the treatment capabilities of the three contaminant removal options, MPPE is probably the most robust alternative as it can be applied to most hydrophobic contaminants, both volatile and nonvolatile, while both air stripping and pervaporation are limited to removing volatile contaminants. Although air stripping without antifoam addition has been included as a contaminant removal alternative in this cost analysis, it should be noted that great care must be taken in designing and operating such a system. Improper design and operation of an air stripper without antifoam addition for treatment of surfactant solutions can easily lead to flooding of the column with foam. Even if foaming is avoided, contaminant removal efficiency will be greatly reduced due to the attraction of the contaminant for the surfactant micelles. Although antifoam addition would greatly reduce the tendency to foam, such additives would likely make reinjection of the subsequently recovered surfactant impossible for technical and/or regulatory reasons. MEUF was the only process examined for concentrating the surfactant following contaminant removal. Unlike the Camp Lejeune demonstration, which used a multiple-pass operation of MEUF to accomplish the target surfactant concentrations, the MEUF system in the surfactant recovery cost estimates was designed for single pass operation to minimize capital costs. This will require greater adjustments to operating parameters than a multiple-pass system that is less sensitive to changes in the influent surfactant concentrations.

It was assumed that superconcentration of calcium would be addressed by adding fresh surfactant. For a one-panel remediation, it is assumed that 30% of the total surfactant requirements will be supplied by recycled surfactant and the rest will be supplied by fresh surfactant; this allows for a greater than one-third dilution factor for the recycled surfactant to adjust calcium concentrations. For a multiple-panel remediation, with the exception of the final panel, it was assumed that all of the surfactant recovered from the preceding panel, or 60% of the total surfactant injected, would be applied to the remediation of that panel. For the final panel of a multiple-panel remediation, there is no reuse value of recovered surfactant due to the need to dilute recycled surfactant with fresh surfactant; therefore, no surfactant recovery is needed. Surfactant recovery operations require additional tankage to store recycled surfactant, and additional laboratory analyses to measure surfactant, cosolvent, contaminant and electrolyte concentrations before reconstitution of the surfactant formulation with fresh surfactant and other makeup chemicals (because only surfactant is recovered in the process). This has a greater impact on the low-k surfactant recovery costs due to the higher surfactant requirements leading to higher volumes of surfactant being recovered. Finally, there is additional labor required to handle the recycled surfactant batches and

to collect analytical samples, as well as to determine the appropriate adjustments of chemicals necessary to amend the recycled surfactant solution.

Other criteria used in developing the surfactant recovery cost estimates are provided in Table 4-9. Additional discussion of these criteria can be found in Appendix C. For the low-k scenarios, the three contaminant removal processes evaluated yielded similar costs; therefore, air stripping costs were used. For the high-k scenarios, the MPPE system was the most cost-effective alternative. Surfactant recovery system costs and savings are presented in Table 4-10. The surfactant recovery cost savings for the one-panel scale high-k SEAR represents 3% of the total project cost. At the 0.5-acre scale for the high-k scenario, due to the higher lease costs relative to the value of recovered surfactant, the higher analytical costs and the higher tankage and pump costs, the surfactant recovery cost savings decreases to 1.3% of the total project cost. At the 1.0-acre scale, the high-k surfactant recovery cost savings is equivalent to 3.3% of the total project cost. Comparable savings were not obtained at the one-panel scale for the low-k system due to equivalent lease costs for a 6 gpm and 18 gpm surfactant recovery system and the considerably longer effluent treatment duration. In fact, for the low-k SEAR, surfactant recovery only shows a cost benefit at the 1-acre scale, where the cost savings represents 1.5% of the total project cost. Therefore, the longer field durations associated with the low-k SEAR, influences not only the subsurface treatment costs but also surfactant recovery costs. For either the low-k or high-k conditions, it can also be seen that if air stripper off-gas treatment is not required at a remediation site, the cost benefits of surfactant recovery are significantly reduced because the credited cost shown in Table 4-10 is no longer applicable. Because the economics of surfactant recycle is a function of many site-specific variables, as well as the SEAR design, the potential benefits of surfactant recovery processes for future SEAR projects should be evaluated on a site-by-site basis.

Many variables impact the system costs and net project savings associated with the implementation of a surfactant recovery system for SEAR processes. All other factors being equal, net project savings will be greater for:

- Higher-cost surfactants
- Contaminants easily separated from surfactant
- Systems where surfactant recovery is high (i.e., high UF recovery, high subsurface capture with low soil sorption, and in situ biodegradation)
- Surfactants with a low foaming potential, thus allowing the use of air stripping for contaminant removal for volatile contaminants
- Less stringent contaminant removal requirements
- High surfactant concentrations (as long as contaminant removal efficiency is not impacted significantly).

Because the economics of surfactant recycle is a function of many site-specific variables, as well as the SEAR design, the potential benefits of surfactant recovery processes for future SEAR projects should be evaluated on a site-by-site basis.

4.2.2.3 Discussion of PITT Costs (Optional). Locating and quantifying the spatial extent of the DNAPL is difficult to achieve because of the complex DNAPL distributions caused by aquifer heterogeneities. The migration of DNAPL through the subsurface occurs due to gravity forces, and trapping in pores occurs due to the effect of capillary forces as a function of grain size. In a situation where there are

Table 4-9. Criteria Used to Develop Surfactant Recovery Costs

Criteria	Low k	High k
Surfactant Injected	4 wt%(active) Alfoterra I12-3PO sulfate™	4 wt% (active) Alfoterra I12-3PO sulfate™
Cosolvent Injected	8 wt% IPA	8 wt% IPA
Design flowrate	6 gpm	18 gpm
Contaminant Removal Process	Air stripping	MPPE
Efficiency of Contaminant Removal Process[(a)]	99%	99%
Subsurface surfactant recovery	80%	80%
Average concentration of surfactant in the SEAR effluent[(b)]	1 wt%	1 wt%
Efficiency of surfactant recovery by MEUF	75%	75%
Days of Operation	One panel: 127 days 0.5 acre: 889 days 1.0 acre: 1,905 days	One panel: 24 days 0.5 acre: 120 days 1.0 acre: 264 days
Days of Surfactant Recovery	One panel: 58 days 0.5 acre: 406 days 1.0 acre: 870 days	One panel: 8 days 0.5 acre: 40 days 1.0 acre: 88 days
Surfactant cost	$4.50/active lb for one panel $3.00/active lb for 0.5 and 1.0 acre	Same as low k
Salvage factor for capital equipment	50%	50%
Tankage requirement (c)	One panel: 2 - 21,000-gal steel tanks 0.5 or 1.0 acre: 7 - 12,000-gal plastic tanks	One panel: 1 - 21,000-gal steel tank 0.5 or 1.0 acre: 2 - 21,000-gal steel tanks
Analytical requirement (d)	One panel: 30 surfactant analyses 25 calcium analyses 0.5- or 1.0-acre (n-1) panels: 55 surfactant analyses (includes 5 quick turnaround analyses) 50 calcium analyses	One panel: 15 surfactant analyses 12 calcium analyses 0.5- or 1.0-acre (n-1) panels: 28 surfactant analyses (includes 3 quick turnaround analyses) 25 calcium analyses
Labor requirement	5 man-hr per panel	Same as low k

(a) A 99% contaminant removal requirement accomplishes 95% contaminant removal prior to surfactant reinjection, assuming that the 1% contaminant remaining is concentrated by a factor of five during MEUF treatment.

(b) This value is calculated as follows. The rate of extraction is three times the injection rate so that the maximum surfactant concentration at the extraction wells is one-third of the injection concentration or (4/3)= 1.33 wt%. Then, assuming 20% surfactant loss in the subsurface, the concentration of surfactant arriving at the extraction well is 1 wt%.

(c) Each 21,000-gal tank requires two recirculation pumps, and each 12,000-gal tank requires one recirculation pump (but due to the slow rate of injection for the low-k SEAR no more than three pumps are needed in operation at one time, so only three are purchased).

(d) Preamendment analyses are needed for each surfactant component and postamendment analyses are required for the contaminant. The on-line GC system can address PCE and IPA analyses; therefore, there is no additional costs for these components. Analytical costs for the one-panel scale remediation or the final panel of a multiple-panel remediation are twice as expensive due to the quick turnaround needed on analytical results, but only half as many analyses are required due to the smaller quantity of recycled surfactant being reinjected. Some quick-turnaround samples have also been included for monitoring surfactant concentrations during MEUF operations.

Table 4-10. Cost and Savings Estimates for Surfactant Recovery at a Site with Parameters Similar to Site 88, MCB Camp Lejeune

Cost and Savings	Low k			High k		
	1 panel	0.5 acre	1.0 acre	1 panel	0.5 acre	1.0 acre
Cost of Recovery Technologies	($ 259,900)	($ 580,600)	($1,015,600)	($82,400)	($252,400)	($381,900)
Value of Recovered Surfactant	$63,000	$ 588,400	$ 1,260,924	$33,600	$ 224,200	$ 493,200
Cost of Additional Tankage and Pumps[(a)]	($10,300)	($66,900)	($75,700)	($2,700)	($10,900)	($19,000)
Cost of Additional Analyses	($5,800)	($46,400)	($92,800)	($7,500)	($17,780)	($35,660)
Cost of Additional Labor	($230)	($1,840)	($3,680)	($230)	($1,840)	($3,680)
Credited Cost[(b)]	$ 91,300	$ 102,800	$ 115,900	$ 90,200	$ 92,400	$ 95,100
Total Net Cost Savings	($121,930)	($4,540)	$189,044	$30,970	$33,680	$148,060

(a) The 21,000-gal steel tanks are rented and the 12,000-gal plastic tanks are purchased. All recirculation pumps are purchased and include utilities costs for half the period of surfactant flooding.
(b) This credits the cost of the air stripper off-gas treatment unit associated with the conventional wastewater treatment system.

zones of higher permeability (i.e., sand interbeds or fractures), the DNAPL has a higher propensity to infiltrate and possibly spread in these zones. These in situ migration characteristics cause the pattern of DNAPL distribution to be complex. Using conventional methods (such as soil sampling) that only examine a small fraction of the in situ volume can lead to significant inaccuraces in the estimates of the DNAPL saturation and volume, and do not provide information about the DNAPL distribution patterns.

Application of PITTs is recommended by the technology vendors for many sites because PITTs can give much better information about the in situ DNAPL conditions than can conventional sampling. Unlike discrete soil sampling, a PITT allows a spatially integrated examination of the in situ volume. A PITT performed prior to the SEAR quantifies the total volume of DNAPL and provides information on the relative distribution of DNAPL (i.e., identifies zones with higher or lower DNAPL saturations.) This data can then be used to optimize the remedial design and SEAR operations. A PITT performed after the SEAR gives a clear quantification of the effectiveness of the aquifer cleanup.

The following site conditions may limit the applicability of the PITT (Lowe et al., 1999b):

- Partitioning of tracers to the soil at sites with high concentrations of natural organic matter complicates interpretation of the results; at these sites, laboratory experiments are necessary to quantify baseline retardation of the partitioning tracers.

- The volume of free-phase DNAPL may be underestimated due to mass transfer (surface area) limitations on partitioning between the pooled DNAPL and the groundwater. However, the error associated with the presence of free-phase DNAPL can be mitigated by implementing a well-designed water flood to mobilize and recover free-phase DNAPL prior to the PITT.

- In a heterogeneous aquifer, PITT performance may be limited by strong permeability contrasts, which exacerbate preferential flow of tracers through the more permeable zones.

Because performing a PITT before and after the SEAR is optional and may not be performed at all sites, the cost for the PITT was not included in the full-scale cost estimates presented in Section 4.2.2.1. However, the PITT is powerful tool for DNAPL site characterization and is becoming a more frequently used option, so costs for the test were estimated for the low and high permeability cases (Table 4-11). The details for these cost estimates are included in Appendix B.

Table 4-11. Projected Cost for PITT

	Pre-SEAR PITT Cost	Post-SEAR PITT Cost
Low k	$182,100	$164,500
High k	$74,900	$71,200

4.2.3 Technology Cost Comparison. In this section, the cost of SEAR treatment for DNAPL removal is compared to the cost of P&T for DNAPL source zone containment, as well as two in situ thermal remediation methods for DNAPL removal: steam injection and resistive heating. The detailed cost comparison report is included in Appendix D. The P&T cost estimate was developed by Battelle Memorial Institute. Battelle also assisted in contacting the thermal treatment vendors and obtaining cost estimates for full-scale application of their technologies for cleanup of the entire DNAPL source zone (including the ESTCP demonstration area) at Site 88, MCB Camp Lejeune. The basis of all cost estimates is the remaining DNAPL source zone at Site 88, which covers approximately 2,500 ft^2. The steam injection cost estimate was based on application of steam-enhanced extraction/hydrous pyrolysis oxidation (SEE/HPO™) by Integrated Water Resources (IWR), Inc. (Parkinson, 2000). Steam injection mobilizes DNAPL toward extraction wells by injecting steam to thermally reduce surface tension. In the hydrous pyrolysis variation, air is injected along with the steam to break down chlorinated volatile organic compounds (CVOCs). The resistive heating cost estimate was based on application of six-phase heating (SPH™) by Current Environmental Solutions (CES), Inc. (Fleming, 2000). SPH™ uses an array of electrodes installed in the ground to generate resistive heating of the soil and groundwater. The DNAPL is volatilized to the vadose zone and captured by means of a vapor extraction system. In both technologies, the fluids recovered aboveground require additional treatment before they are discharged to a sewer. By the very nature of their application, both steam injection and resistive heating will treat the entire 11-ft thickness of the shallow aquifer, not just the bottom 5 ft. Neither of the two vendors contacted indicated any additional technology-specific characterization requirements beyond what may have already been done to delineate the hydrogeology and DNAPL distribution in the source region.

Table 4-12 summarizes the total cost of SEAR and other alternative technologies considered for remediation of the DNAPL source zone at Site 88, MCB Camp Lejeune. All three alternatives (and SEAR) have been used previously at various sites for DNAPL source remediation; however, their relative technical merits under different site conditions may vary and these performance advantages/limitations have not been considered in this level of cost evaluation. It also is assumed that SEAR and the alternative thermal technologies will treat the DNAPL source zone to a point where natural attenuation will be able to address any residual plume; this assumption does not apply to the P&T technology as it is intended to achieve containment rather than remediation. The posttreatment cost of monitored natural attenuation is not included for any of the technologies. For any of the technologies under consideration, costs of pre- and posttreatment site characterization of the DNAPL source have not been included. It is assumed that the site owners will bear the cost of pre- and posttreatment characterization, and that technology vendors will be presented with a well-characterized site.

Table 4-12. Summary of Costs for SEAR and Alternative Technologies for Full-Scale Remediation of the DNAPL Source Zone at Site 88, MCB Camp Lejeune

Cost Category	SEAR[a]	P&T System[a]	Steam Injection[a]	Resistive Heating[a]
Capital Investment	$890,000	$120,000	$702,000	$347,000
Contaminant Disposal Costs	$3,800	$30,000[b]	$90,000	$94,000
O&M Cost[c]	$ 498,100	$1,385,000[b]	$403,000	$198,000
Total (PV) Cost	**$1,391,900**	**$1,535,000**[c,d]	**$1,195,000**	**$639,000**

(a) All costs rounded to the nearest thousand. Postremediation action required to control any residual plume is not included. Costs of site characterization of the DNAPL source zone before or after treatment is not included for any technology.

(b) $1,415,000 ($1,385,000 O&M cost and $30,000 contaminant disposal cost) is the undiscounted (rate of return = 0) PV of the recurring and periodic O&M costs in today's dollars spread over 30 years of operation. This total includes $45,000 of recurring annual operating and maintenance (O&M) cost incurred in every year of operation, $13,000 in periodic maintenance costs incurred every 10 years, and $13,000 in periodic maintenance costs incurred every 20 years.

(c) O&M costs not including contaminant disposal.

(d) $1,535,000 is the undiscounted (rate of return = 0) PV cost over 30 years of operation. This total is the sum of the initial capital invested and the annual real costs over 30 years. If P&T were to be continued for 100 years, the total undiscounted PV cost would be almost $5 million.

SEAR, steam injection, and resistive heating are source remediation technologies with applications that can be completed in a few months. P&T is a long-term source control technology and the total cost for this option is based on the present value (PV) of all the costs incurred over a 30-year period of application.

Section 5.0: IMPLEMENTATION ISSUES

This section examines the lessons learned from the SEAR demonstration and provides background information to allow assessment of the effectiveness, implementability, and cost of full-scale application of the SEAR technology at Site 88, MCB Camp Lejeune, and at other sites.

5.1 Cost Observations

The ESTCP demonstration costs, interpreted on the basis of the amount of area or volume remediated, are higher than are normally estimated for site remediation technologies. The resulting high unit costs for the demonstration are expected due to the application of the fixed costs inherent in source zone characterization, surfactant selection, and mobilization to and setup at a small site, as well as developmental and validation costs that were associated with this particular demonstration. Additionally, site-specific factors tend to increase the unit cost for the technology. The hydraulic conductivity of the site ranged from 10^{-5} to 10^{-4} cm/sec, which is near the lower limit for feasible application of SEAR in shallow aquifers (e.g., 20-25 ft [6.1-7.6 m] deep).

Full-scale SEAR costs are greatly reduced, by 33%-66%, for the high permeability scenario depending upon the scale of remediation, which shows the extent to which permeability influences the cost of SEAR application. Low hydraulic conductivity decreases the flowrates that can be achieved per well, which in turn increases the number of wells needed and the time needed to flood the targeted DNAPL zone with the required number of pore volumes. Flowrate limitation due to low hydraulic conductivity was further aggravated by the Site 88 aquifer being relatively thin and near the surface; these site-specific conditions limited the range that water levels could be raised or lowered in order to increase the hydraulic gradient between the injection and extraction wells. For this reason, mobility control measures cannot be implemented at Site 88 to improve technology cost and performance.

In addition to the effects of permeability, SEAR costs are also affected by the scale of remediation. For both the low-k and high-k SEAR systems, unit costs decrease by ≥50% when the scale of application is increased to 0.5 and 1.0 acre.

As expected, the unit costs estimated for full-scale application are significantly lower than the actual unit costs for the ESTCP demonstration; however, even the lower full-scale costs are in the high range of costs for conventional remediation technologies. However, DNAPL remediation is difficult, so direct comparison with the cost of conventional technologies may be misleading given the differences in performance between SEAR and conventional technologies. A comparison of full-scale costs of SEAR to the costs of alternative DNAPL removal technologies indicates that SEAR costs are comparable to steam stripping costs for Site 88, while resistive heating appears to be the least expensive option. Alternative technologies were compared only on the basis of cost because there is no performance data for the alternative technologies at this site. The SEAR costs shown herein may be somewhat more accurate than the cost estimates for the alternative technologies because the SEAR costs were related to the actual costs of SEAR at Site 88 during the demonstration, whereas the other technology vendors have no prior experience conducting remedial operations under the site-specific conditions at Site 88.

The cost assessment results indicate that SEAR costs are closely linked to site conditions. The following factors should be considered during technology evaluation and design:

- Under shallow conditions (<25 ft), the bulk permeability as well as the permeability variation or heterogeneity will have a greater influence on technology cost and performance than when the contamination is situated at greater depths. For

example, the presence of shallow conditions, low bulk permeability ($K \leq 10^{-4}$ cm/sec) and high permeability contrast ($K_{max}/K_{min} \approx 10$) will increase the cost of SEAR remediation by 150%-300% relative to a site with similar characteristics but with a bulk permeability of $K \geq 10^{-3}$ cm/sec.

- For sites with heterogeneities, incorporating mobility control measures into a SEAR design can significantly reduce remediation costs while also improving technology performance. However, shallow and low bulk permeability conditions restrict the use of mobility control measures. The implementability of mobility control measures should be an important consideration in the selection of SEAR as a DNAPL removal alternative.

- Regeneration and reuse of surfactant has the potential to improve cost-effectiveness when the scale of SEAR application is sufficiently large or the SEAR remediation is of short duration. The scale and treatment duration at which surfactant recycle will become cost-effective and the amount of cost savings available will vary with site- and project-specific factors such as the overall surfactant requirement, surfactant cost, regulatory standards for contaminant removal and surfactant recoveries from the subsurface.

5.2 Performance Observations and Lessons Learned

The demonstration at Site 88 provided several key indications of the site and technology factors driving SEAR performance. It is important to carefully consider the following factors when planning a full-scale in situ surfactant flooding system for MCB Camp Lejeune or other sites (Fountain et al., 1995; U.S. EPA, 1996a; Roote, 1997):

- In situ heterogeneity
- Aquifer permeability
- Hydrostratigraphy
- DNAPL distribution
- Surfactant phase behavior
- Surfactant solubilization capacity
- Surfactant sorption
- Surfactant degradation
- DNAPL mobilization
- Aquifer geochemistry.

Laboratory-phase behavior experiments showed that the average expected PCE solubilization was about 350,000 mg/L for the surfactant injectate mixture used in this SEAR demonstration. However, this number is never directly comparable to the PCE concentrations measured in the extraction wells during a surfactant flood for the following reasons: (1) dilution occurs at the extraction wells as groundwater is pumped from both outside the test zone as well as inside the test zone; and (2) lower DNAPL saturations occur in the subsurface compared to experiments that were conducted with a DNAPL:water ratio of 1:1 (50% DNAPL). Based on the surfactant and IPA concentration data at the most contaminated well pair (EX01 and EX04), there was a dilution factor of approximately three in these extraction wells. For this same well pair, the pre-SEAR PITT data showed that the average DNAPL saturation was approximately 4.5%. Combining the two, a dilution factor of $(50/4.5) \times 3 = 33.33$ is expected. Therefore, a maximum concentration of 10,500 mg/L PCE is expected in the field during peak surfactant breakthrough at an extraction well. As a result of subsurface heterogeneities, not all of the DNAPL contaminated zones were

efficiently, or simultaneously, contacted by surfactant solution during surfactant flooding, which explains the observed maximum PCE concentrations at EX01 and EX04 ranging between 1,000 and 2,000 mg/L.

The surfactant flood was extended for 10 days beyond the planned 48 days in response to the relatively slow PCE removal rates measured early in the demonstration (i.e., slow compared to the predicted removal rates from the design simulations). Additionally, the postsurfactant water flooding was increased by 14 days in response to the slow surfactant removal rates relative to the design simulations. PCE concentrations remained high in the extraction well effluent (approximately 1,000 mg/L at EX01 and EX04R) even at the end of the surfactant flood (Figures 3-1 and 3-4), which showed that a further extension of surfactant flooding would have recovered additional DNAPL from the test zone; however, limited project funds precluded further extensions.

Samples of groundwater taken during, and soil taken after, the demonstration indicated that DNAPL removal in the subsurface zone between ~15-18 ft (4.6-5.5 m) bgs was complete. However, DNAPL remained in the middle zone ~18-19 ft (5.5-5.8 m) bgs, and bottom zone ~19-20 ft (5.8-6.1 m) bgs of the aquifer. The middle zone was partially remediated by surfactants; however, very little surfactant penetrated into the bottom (i.e., basal silt) zone during the flooding. Although the basal, low-permeability zone was not fully remediated by SEAR, the DNAPL remaining in this zone appears to pose little risk at this site with respect to propagation and transport of the aqueous-phase PCE plume. Prior to the SEAR demonstration, DNAPL that was present in the overlying higher permeability zone was the primary cause of plume propagation and transport at Site 88, however, DNAPL was very effectively removed from this zone by SEAR. Post-SEAR monitoring of the upper and middle zones recently showed almost a five order of magnitude difference in PCE concentrations between MLS-2T and MLS-2M. This suggests that plume transport, from the DNAPL that remains in the basal silt to the overlying fine sand transport zone, is diffusion limited. The high permeability contrast that limited mass transfer of PCE under a forced gradient, high-solubilization system (SEAR) further limits mass transfer of PCE under static groundwater conditions from the low permeability zone basal silt. Furthermore, static vertical hydraulic gradients are downward at the site, between the shallow aquifer and the underlying Castle Hayne aquifer. Given this, and the presence of a thick clay aquitard at the base of the shallow aquifer, it is thus expected that there is little "potential" to drive PCE (dissolved or immiscible) from this basal, low permeability zone into a more permeable (underlying or overlying) plume transport zone.

Limited effectiveness of flooding in the lower zones is attributed to the permeability of the basal silt layer being about 10 times lower than that of the upper zone of the aquifer, causing preferential flow of surfactants through the more permeable zones. The effect of this heterogeneity emphasizes the importance of having a detailed understanding of the geosystem prior to development of the remedial design. Yet while tools such as the CITT and PITT in combination with discrete sampling methods (i.e., sample collection from MLSs) can improve design and lower capital and operating costs, it can still be difficult to fully characterize the variations in hydraulic conductivity of a heterogeneous aquifer. At Camp Lejeune, the actual permeability contrast was underestimated by a factor of two, with deleterious results. For these reasons, a robust SEAR design that can overcome shortcomings of source-zone characterization is highly desirable.

The solution to a robust SEAR design is the inclusion of mobility control measures. Due to recent advancements in SEAR design, mobility control is now considered an integral component of SEAR design and implementation because it improves the effectiveness of SEAR in two important ways: (1) it significantly mitigates the effects of heterogeneities with respect to remedial performance, and (2) decreases costs, primarily by reducing the amount of surfactant required. Under shallow conditions (20-25 ft to the bottom of the contaminated zone), the minimum bulk hydraulic conductivity needed to permit an efficient sweep of a high viscosity polymer-surfactant solution is approximately 10^{-3} cm/sec. A minimum depth of 50 ft is recommended for lower bulk hydraulic conductivities. This additional depth,

or aquifer thickness, allows a greater range of hydraulic gradients to be imposed by the injection and extraction wells during flooding operations, which is needed to drive the higher viscosity polymer-surfactant solution through a low-permeability formation. Alternatively, the use of foam for mobility control will additionally be limited by the composition of the surfactant formulation, i.e., when cosolvent is a component, surfactant-foam processes cannot be used due to the defoaming properties of alcohol cosolvents. For optimum system performance, mobility control measures that can improve the sweep of surfactants through the low permeability zones of a heterogeneous aquifer are highly recommended in the design of all future SEAR projects. If the hydrogeologic setting at a given site will not allow the use of mobility control, then as the Camp Lejeune results indicate, decreased performance and increased costs can be expected.

Another recommendation for optimizing the future performance of surfactant floods in aquifers with appreciable permeability contrasts such as Camp Lejeune is to install separate arrays of injection and extraction wells that are discretely screened over the particular aquifer zone that requires improved sweep. For example, at Camp Lejeune, an additional injection well could be installed at each injection location, with a screened interval discretely limited to the lowest perm zone (bottom 1.5 to 2 ft) of the aquifer to focus the flow of surfactant fluids through this zone. A likely implementation of this technique would be to install two arrays of cone penetrometer test (CPT) well-points, one array screened in the overlying higher permeability zone and the other array screened in the basal silt layer.

SEAR wells are crucial components of the remediation system because surfactant fluids are delivered and controlled in the subsurface via injection, extraction and hydraulic control wells. As such, SEAR wells should be thought of as performance wells, with much higher specifications compared to monitoring wells. Conventional well installation methods should be strictly followed for SEAR wells, including proper screen length and placement, appropriate screen slot size, continuous-slot screens, and appropriate filter pack material (see Driscoll, 1995). Following proper installation, vigorous well development is very important for maximizing the well efficiency of the remediation wells. This ensures that the maximum range of injection and extraction flowrate can be applied across the well field, which is especially important for surfactant flooding a shallow aquifer with tight sediments. Effective well development can be accomplished by vigorous surging and pumping, which needs to be emphasized with the driller prior to mobilizing to the field for well installation. Although this task was specified in the driller's scope of work for the Camp Lejeune well installations, the surge block supplied by the driller was not properly designed for effective well development. Consequently, one extraction well installed in a known free-phase DNAPL zone yielded no DNAPL and was replaced. Hydraulic control well HC-01 received less well development because it was situated inside of a building that didn't allow access of a drilling rig for vigorous surging. With only hand-surging performed, its efficiency was expected to be less than for other wells. This may have been a contributing factor to the temporary loss of hydraulic control detected at RW-03 when injection and extraction flowrates were increased during Phase II of the surfactant flood.

The underestimate of the initial DNAPL volume during the pre-SEAR PITT, as well as the lower than expected tracer recoveries in both the pre- and post-SEAR PITT suggest limitations in implementing PITTs in an aquifer with low bulk permeability plus significant permeability contrast. These limitations should be considered in future decisions in using and designing PITTs. Additionally, when designing PITTs in an aquifer with significant clay content that necessitates calcium as the primary electrolyte, tendencies of surfactants to form complexes with calcium-containing clays should be carefully examined for proper surfactant flood design to avoid interfering effects with the PITT. Under these conditions, surfactants other than Alfoterra should also be investigated.

Some separation in the surfactant and IPA curves was observed during postsurfactant water flooding, and indicates that late-time sorption and possibly biodegradation of the surfactant occurred to some degree. It is hypothesized that biodegradation was occurring primarily in the basal, low

permeability zone of the aquifer, due to the longer residence times in this silty zone. It is also probable that the more anoxic geochemical conditions in the basal portion of the aquifer favored biodegradation of the sulfated surfactant. The middle and bottom MLS data show that surfactant was minimal or absent in the basal zone; i.e., slow to get in and slow to get out, which results in long residence times. However, the upper MLS data show that the higher permeability zone was very responsive to surfactant and water flooding. Surfactant was present at high concentrations in the upper zone during surfactant flooding, and surfactant concentrations dropped off precipitously, as intended, once the postsurfactant injection water flooding was initiated (Figure 3-2).

Water-level (potentiometric surface) maps measured during the demonstration were used to evaluate the effectiveness of hydraulic control. Overall, hydraulic containment was very effective; however, the potentiometric maps indicated that minor amounts of the injected surfactant solution were not captured by the extraction wells during one particular period of the surfactant flood. IPA was detected in one monitoring well, RW03, which was located directly downgradient, providing an ideal worst-case monitoring point. The highest concentration of IPA detected at well RW03 was 2,798 mg/L, which is 2% of the injectate IPA concentration of 160,000 mg/L. The relatively low concentration of IPA detected in RW03 (compared to the injectate concentration), the nondetectable concentrations of IPA and surfactant in all monitoring wells except RW03, and the recovery of 88% of the injected IPA, all indicate that the potential for escape of the injectate solution was very low.

A very positive result of the SEAR demonstration, as observed by comparison of the of the pre-SEAR and post-SEAR PITTs, was the lack of any evidence of aquifer plugging (i.e., loss of permeability) as a result of surfactant injection into such a fine-grained formation. The ability to formulate a surfactant solution that interacts favorably with the in situ geology is an important factor in the effective application of SEAR technology, and is especially critical when applying SEAR in tight sediments such as at Site 88, MCB Camp Lejeune. At Camp Lejeune, and for many SEAR projects conducted to date, optimizing surfactant phase behavior for compatibility with the aquifer has been accomplished with the use of cosolvent in the surfactant formulation. The high residual IPA concentrations (up to 44,000 mg/L) remaining in the SEAR treatment zone approximately 18 months after the completion of the demonstration imply that the use of surfactants requiring high cosolvent concentrations, should be reconsidered in future SEAR applications. Cosolvents also complicate SEAR effluent treatment and prevent the use of surfactant-foam for mobility control. Newly developed surfactants such as the Alfoterra 123-8PO sulfate™ and Alfoterra I12-3PO sulfate™ that minimize the cosolvent requirement, or surfactants yet to be identified that can be used without any cosolvent should receive preference. In addition, cosurfactants have recently emerged as substitutes for cosolvents in surfactant systems, and should be explored further.

A minor component of the surfactant apparently sorbed to the aquifer matrix, which then interfered with the partitioning behavior of the tracers during the post-SEAR PITT. The post-SEAR PITT results indicated that the DNAPL saturation had increased, despite the measured recovery of a substantial volume of DNAPL from the test zone. The high organic content of the Camp Lejeune soils and the natural tendency of partitioning tracers to sorb to these soils masked the sorbing effect of the surfactant impurity during laboratory surfactant testing. Thus, in future efforts to examine the interfering effects of surfactant impurities, laboratory experiments should include the use of clean Ottawa sands.

The surfactant developed for the SEAR demonstration was able to achieve high PCE solubilization, acceptable flow properties, and compatibility with aquifer materials while allowing aboveground processing for surfactant regeneration. However, the range of $CaCl_2$ concentrations to maintain Winsor Type III conditions (for maximum contaminant solubilization and IFT reduction by surfactant) was too narrow (between 0.18 to 0.20 wt% $CaCl_2$). This resulted in difficulty to maintain the surfactant injectate solution at optimum efficiency without increasing the risk of undesirable Winsor Type II conditions (>0.20 wt% $CaCl_2$) that result in surfactant loss to the DNAPL. Therefore, the average calcium

concentration used was lower than optimum, around 0.17 wt%, to minimize the potential risk of Type II conditions. Solubilization of PCE at 0.17 wt% and 0.185 wt% calcium by the Alfoterra surfactant is 400,000 and 500,000 mg/L PCE, respectively. Therefore, operating at 0.17 wt% $CaCl_2$ is equivalent to a 20% loss of solubilization potential. A lesson learned from this demonstration is that it is preferable to use surfactants with a wider range of Type III phase behavior (i.e., a wider range of electrolyte concentrations for Type III phase behavior). The use of on-line metering and mixing of surfactant formulation components for the preparation of surfactant injectate is also recommended for improved precision and accuracy of the surfactant formulation. However, phase behavior experiments must still be performed regularly during field operations by qualified personnel to verify that surfactant injectate meets design specifications.

Finally, the aboveground treatment operations demonstrated that surfactant was indeed recoverable for the purposes of reinjection. However, there is an issue with parallel concentration of the contaminant and electrolyte when calcium is used as the sole or primary electrolyte to avoid mobilization of soil fines, and surfactant is recovered and concentrated by ultrafiltration. This places a high demand on the performance of processes used to separate the DNAPL contaminant from the surfactant and requires that fresh surfactant be added to recovered surfactant to amend its composition. However, individual surfactants are expected to have varying affinity for calcium, so excessive calcium buildup in MEUF will not necessarily be a problem for all surfactants.

5.3 Regulatory Issues

The predominance of groundwater contamination and the lack of methods to treat the contamination in an effective and economical manner is a problem of great concern to the U.S. EPA and the regulated community. Regulators are especially concerned about the issue of chlorinated solvent contamination in groundwater and its potential for persisting for hundreds of years despite efforts to remove it using conventional methods such as pumping groundwater for treatment aboveground. Surfactant enhancements to aquifer flooding is one of six abiotic technologies identified by the U.S. EPA as emerging as possible cleanup remedies for recalcitrant sites (U.S. EPA, 1995a). Information on the status and regulatory acceptance of in situ flushing (or flooding) also has been tabulated by the Ground-Water Remediation Technologies Analysis Center (Roote, 1998).

Injection wells are regulated by the Underground Injection Control (UIC) program under the federal Safe Drinking Water Act (SDWA). Under the UIC program, injection of any fluid into a well is prohibited, except as authorized by permit or rule. U.S. EPA regional offices administer the UIC programs in 15 states, but has delegated authority for maintaining all or part of the UIC programs to 35 states.

Injection wells incidental to aquifer remediation and experimental technologies are distinguished from hazardous waste injection wells and are designated as Class V wells under the UIC program. Class V wells covered by the federal UIC program are authorized by rule and do not require a separate UIC permit. A Class V well regulated by a state may require a permit.

Application of UIC requirements depends on the regulatory framework controlling the cleanup with fewer restrictions expected for cleanup activities conducted under Comprehensive Environmental Response, Compensation, and Liability Act (CERCLA) authority (U.S. EPA, 1995b). UIC requirements typically are applicable to Resource Conservation and Recovery Act (RCRA) corrective action cleanup projects, but may not be applicable or relevant or appropriate to CERCLA sites. The purpose of the UIC program is to protect underground sources of drinking water (USDWs), and the contaminated aquifers at Superfund sites typically do not serve as USDWs.

The U.S. EPA recently reviewed state policies controlling injection of surfactants, cosolvents, and nutrients for groundwater to promote aquifer remediation (U.S. EPA, 1996b). This review

determined that 11 states have allowed surfactant injection, mostly for the enhancement of existing P&T systems. Most of these approvals were for application to CERCLA sites. No state has a direct regulatory prohibition on injection technologies for treating contaminated aquifers. Prior to 1995 a few states prohibited the use of injectants, either through bans on new Class V injection wells or prohibition of injectants that did not meet groundwater quality criteria. Currently exceptions are made for Class V remediation wells, and the states that prohibit injection of fluids that do not meet groundwater standards allow the use of site-specific criteria for contaminated aquifers.

Few states have policies that discourage use of injection technologies, and most of those that do have approved individual projects. A small number of states have rejected most or all of the proposals they have received for injection projects on policy or technical grounds. Reasons given for rejecting proposals include the following:

- Failure to include or adequately demonstrate a monitoring and recovery plan in the proposal
- Failures of previously approved injection projects
- Lack of a clearly defined process for obtaining approval, and uncertainty over the identity of agencies authorized to approve injection
- Lack of experience with injection projects.

Technical merits of the proposed technology, as reflected in a detailed work plan, are the most important factors considered by a state. Almost all states rely on the terms of the technical proposal, and almost all decisions are made on a case-by-case basis. Several states require a closed system or some other evidence that all of the injectate will be captured and removed, particularly for surfactant injection. Any work plan must provide for comprehensive monitoring of injectant transport and recovery.

The feasibility of surfactant reuse is strongly dependent on site-specific regulations, as contaminant removal to maximum contaminant levels (MCLs) prior to surfactant reinjection is cost-prohibitive. Secondary contaminants, such as the Varsol™ contamination at Camp Lejeune, may also be an issue. For the Camp Lejeune demonstration, regulators were willing to be lenient on the 95% contaminant removal standard required for surfactant reinjection due to planning-phase discussions where the project team established that: (1) good hydraulic control would be maintained, based on CITT and PITT results, and that (2) the concentrations of contaminant being injected would be lower than the contaminant concentrations remaining within the aquifer. Although (2) was not actually met for Varsol™ during the SEAR demonstration, the regulators had also requested collection of pre- and post-SEAR groundwater samples for Varsol™ analysis to confirm that SEAR, although not targeted to remove Varsol™ from the aquifer, did not worsen Varsol™ contamination in the groundwater. Although the analytical data obtained using five analytical methods for petroleum hydrocarbons shows somewhat conflicting results, it appear that SEAR treatment had little impact on Varsol™ concentrations in the aquifer. Further discussion of these results can be found in the Final Technical Report (Battelle/DE&S, 2001).

A recently completed surfactant flood at Alameda Point, CA, where surfactant reinjection was also accomplished with contaminants exceeding MCLs (U.S. EPA, 1999; Hasegawa, 1999), indicates that the reinjection of surfactants at MCB Camp Lejeune is not exceptional. As regulatory interpretations allowing the use of injectants have recently become more lenient, it is possible that a similar trend will follow for the reinjection of SEAR process chemicals.

Section 6.0: REFERENCES

6.1 Key References

Battelle and Duke Engineering & Services. 2001. *Final Technical Report for Surfactant-Enhanced DNAPL Removal at Site 88, Marine Corps Base Camp Lejeune, North Carolina*. Prepared for NFESC by Battelle Memorial Institute, Columbus, OH, and Duke Engineering & Services, Austin, TX.

DE&S, see Duke Engineering and Services.

Duke Engineering and Services. 1999a. *Sampling and Analysis Plan for Surfactant-Enhanced Aquifer Remediation Demonstration, Site 88 Marine Corps Base Camp Lejeune, North Carolina.* Prepared for NFESC by Duke Engineering & Services, Austin, TX.

Duke Engineering and Services. 1999b. *Work Plan for Surfactant-Enhanced Aquifer Remediation Demonstration, Site 88 Marine Corps Base Camp Lejeune, North Carolina*. Prepared for NFESC by Duke Engineering & Services, Austin, TX.

Duke Engineering and Services. 1999c. *DNAPL Site Characterization Using a Partitioning Interwell Tracer Test at Site 88, Marine Corps Base, Camp Lejeune, North Carolina*. Duke Engineering & Services, Austin, TX.

Duke Engineering and Services. 2000. *Surfactant-Enhanced Aquifer Remediation at Site 88, MCB Camp Lejeune, North Carolina*. Final. Prepared for NFESC by Duke Engineering & Services, Austin, TX.

Delshad, M., G.A. Pope, and K. Sepehrnoori. 1996. "A Compositional Simulator for Modeling Surfactant-Enhanced Aquifer Remediation: 1. Formulation." *Journal of Contaminant Hydrology, 23*(4): 303-327.

Fleming, D. 2000. Personal communication from D. Fleming, CES, Inc., Bellevue, WA. May 2000.

Naval Facilities Engineering Service Center. 1999. *ESTCP Technology Demonstration Plan for Surfactant-Enhanced DNAPL Removal*. Prepared for ESTCP program office by NFESC, Port Hueneme, CA.

NFESC, see Naval Facilities Engineering Service Center.

Parkinson, D. 2000. Personal communication from D. Parkinson, IWR, Inc., Santa Barbara, CA. May 2000.

Talisman Partners and R.S. Means. 2000. *Environmental Remediation Cost Data – Unit Price – Sixth Edition*. R.S. Means, Kingston, MA.

6.2 General References

Brown, C.L., M. Delshad, V. Dwarakanath, D.M. McKinney, G.A. Pope, W.H. Wade, R.E. Jackson, J.T. Londergan, and H.W. Meinardus. 1998. "A Successful Field Demonstration of Surfactant Flushing of an Unconfined Aquifer Contaminated by Chlorinated Solvents." In M.L. Brusseau, D.A. Sabatini, J.S. Gierke, M.D. Annable (eds.), *Innovative Subsurface Remediation: Field Testing of Physical, Chemical and Characterization Technologies*, American Chemical Society, Washington, DC.

Driscoll, F.G., 1995. *Groundwater and Wells*, 2nd edition. U.S. Filter/Johnson Screens, St. Paul, MN.

Fountain, J.C., C. Waddell-Sheets, A. Lagowski, C. Taylor, D. Frazier, and M. Byrne. 1995. "Enhanced Removal of Dense Nonaqueous-Phase Liquids Using Surfactants." In D.A. Sabatini, R.C. Knox, and J.H. Harwell (eds.), *Surfactant-Enhanced Subsurface Remediation–Emerging Technologies*. ACS Symposium Series 594. American Chemical Society, Washington, DC.

Hasegawa, M. 1999. Personal communication by Mark Hasegawa, project manager from Surbec Environmental LLC (which conducted the Alameda demo), with Laura Yeh, ESTCP project manager.

Jawitz, J.W. et al. 2000. "In-Situ Alcohol Flushing of a DNAPL Source Zone at a Dry Cleaner Site." In review with *Environmental Science & Technology*.

Lowe, D.F., C.L. Oubre, and C.H. Ward. 1999a. *Reuse of Surfactants and Cosolvents for NAPL Remediation*. Lewis Publishers, Boca Raton, FL.

Lowe, D.F., C.L. Oubre, and C.H. Ward. 1999b. *Surfactants and Cosolvents for NAPL Remediation–A Technology Practices Manual*. Lewis Publishers, Boca Raton, FL.

Roote, D.S. 1997. *Technology Overview Report–In Situ Flushing*. TS-97-02. Ground-Water Remediation Technologies Analysis Center, Pittsburgh, PA.

Roote, D.S. 1998. *Technology Status Report–In Situ Flushing*. TS-98-01. Ground-Water Remediation Technologies Analysis Center, Pittsburgh, PA.

United States Environmental Protection Agency. 1995a. *In Situ Remediation Technology Status Report: Surfactant Enhancements*. EPA/542/K-94/003. Office of Solid Waste and Emergency Response, Washington, DC.

United States Environmental Protection Agency. 1995b. *Surfactant Injection for Ground Water Remediation: State Regulators' Perspectives and Experiences*. EPA/542/R-95/011. Technology Innovation Office, Washington, DC.

United States Environmental Protection Agency. 1996a. *Environmental Research Brief–Surfactant-Enhanced DNAPL Remediation: Surfactant Selection, Hydraulic Efficiency, and Economic Factors*. EPA/600/S-96/003. Office of Solid Waste and Emergency Response, Washington, DC.

United States Environmental Protection Agency. 1996b. *State Policies Concerning the Use of Injectants for In Situ Groundwater Remediation*. EPA/542/R-96/001. Technology Innovation Office, Washington, DC.

United States Environmental Protection Agency. 1999. *Surfactant-Enhanced Subsurface Remediation to Remove DNAPL: Groundwater Currents*. EPA/542/N-99/006. Solid Waste and Emergency Response, Washington, DC.

6.3 Associated DoD Contracts and Their Locations

Table 6-1. Summary of Contracts and Purchase Orders

Contract # or Purchase Order #	Date Awarded	Title	Contracting Office
Duke Engineering and Services, Austin, TX			
N47408-97-M-0970	22-Jul-97	Technical Field Support for DNAPL characterization activities at Bldg. 25 MCB Camp Lejeune, NC	NAVFACCO
N47408-99-P-6034	29-Sep-99	SEAR Technology Protocol Development	NAVFACCO
N00244-99-P-3740	27-Sep-99	Preparation of Grain Size Analysis/Soil Samples/Data Analysis	FISC San Diego
N00244-00-P-1812	11-Feb-00	Sensitivity analyses of Camp Lejeune Data	FISC San Diego
University of Oklahoma (Norman)			
N47408-97-C-0218	23-Jun-97	Design and Construction of Micellar Enhanced Ultrafiltration (MEUF) Units to Concentrate Surfactants from a Dilute Micellar Solution	NAVFACCO
University of Texas (Austin)			
N47408-97-M-0950	11-Jun-97	Modeling and Design of a Surfactant Flood Test with Surfactant Recovery and Reuse	NAVFACCO
N47408-99-P-6020	17-Sep-99	Documentation of UTCHEM Simulations for Design of SEAR Test at MCB Camp Lejeune, North Carolina	NAVFACCO
NJIT			
N47408-97-M-0881	08-Apr-97	Technical Support for the Design and Construction of a 10 gpm Pervaporation Unit Using Hollow Fiber Modules Developed by AMT	NAVFACCO
Surbec			
N00244-00-P-1602	26-Jan-00	Review of Wastewater Treatment Sections of SEAR Design & Operations Manuals	FISC San Diego
Terratek			
N69218-99-MD88127	22-Sep-99	Grain-size analyses of Camp Lejeune soil samples	NFESC
Baker Environmental, Inc.			
N62470-89-D-4814, CTO #356			
Mod 5	27-Aug-97	Phase 1 & Phase 2 Site Characterization for DNAPL, Operable Unit. No. 15 (Site 88), MCB Camp Lejeune, NC	LANTDIV
Mod 6	16-Sep-97	Partitioning Interwell Tracer Test, Part I, Operable Unit No. 15 (Site 88), MCB Camp Lejeune, NC	LANTDIV
Mod 7	30-Sep-97	Part I support for SEAR Test, Operable Unit No. 15 (Site 88), MCB Camp Lejeune, NC	LANTDIV
Mod 8	09-Jan-98	Presurfactant Flood Partitioning Interwell Tracer Test (PITT), Part II, Field Installation at Operable Unit No. 15 (Site 88), MCB Camp Lejeune, NC	LANTDIV
Mod 9	16-Mar-98	Presurfactant Flood Partitioning Interwell Tracer Test (PITT), Part III, Field Installation at Operable Unit No. 15 (Site 88), MCB Camp Lejeune, NC	LANTDIV
Mod 11	17-Jul-98	Surfactant Flood Test and Postsurfactant PITT, Operable Unit No. 15 Site 88, MCB Camp Lejeune, NC	LANTDIV
Mod 12	29-Sep-98	Cost and Scope Modification Request, Phase I and II Investigations Operable Unit No. 15 (Site 88) and Operable Unit No. 16 (Sites 89 and 93)	LANTDIV
Mod 14	30-Sep-99	SEAR Test Scope and Cost Growth, Site 88, MCB Camp Lejeune, NC	LANTDIV
Battelle			
N47408-95-D-0730/DO112		Cost and Performance Report for ESTCP Surfactant-Enhanced DNAPL Removal	NFESC

Table 6-2. Contracting Offices

Agency	Addresses for Contracting Offices
NAVFACCO	Naval Facilities Engineering Command, Contracts Office, Code 80, Bldg. 41 NAVFACENGCOMDET-SLC 4111 San Pedro St. Port Hueneme, CA 93043-4410
FISC San Diego	Fleet and Industrial Supply Center, San Diego Simplified Acquisition, Code 220H 1000 23rd Ave. Suite 2 Port Hueneme, CA 93043-4309
NFESC	Naval Facilities Engineering Service Center 1100 23rd Ave. Port Hueneme, CA 93043-4370 Attn: Ms. Patty Chico, Code ESC 13
LANTDIV	Commander Atlantic Division, Naval Facilities Engineering Command or LANTNAVFACENGCOM 1510 Gilbert Street Norfolk, VA 23511-2699 Attn: Ms. Beth Collier, Contract Specialist, Code 02115

APPENDIX A

POINTS OF CONTACT

ESTCP Project Manager
S. Laura Yeh, P.E.
Naval Facilities Engineering Service Center
Code ESC 411
1100 23rd Ave.
Port Hueneme, CA 93043
Tel: (805) 982-1660
Fax: (805) 982-4304
E-mail: yehsl@nfesc.navy.mil

Co-Investigators
Dr. Leland Vane
Role: Design, construction and field-testing of pervaporation system
Title: Pervaporation Team Leader
U.S. EPA, National Risk Management Research Laboratory
26 West Martin Luther King Dr. (M/S 443)
Cincinnati, OH 45268
Tel: (513) 569-7799
Fax: (513) 569-7677
E-mail: vane.leland@epamail.epa.gov

Dr. A. Lynn Wood
Role: Provided input to pre- and post-SEAR site characterization and SEAR monitoring approach
Title: Sr. Soil Scientist
U.S. EPA, NRMRL
Non-FedEx: P.O. Box 1198
FedEx: 919 Kerr Research Drive
Ada, OK 74820
Tel: (580) 436-8552
Fax: (580) 436-8582
E-mail: wood.lynn@epamail.epa.gov

University Collaborators
Dr. Gary A. Pope
Role: Responsible for SEAR design, from surfactant selection through numerical design simulations to establish field operating parameters and test duration
Title: Director, Center for Petroleum and Geosystems Engineering
The University of Texas at Austin
Austin, TX 78712
Tel: (512) 471-3235
Fax: (512) 471-9605
E-mail: Gary_Pope@pe.utexas.edu

Dr. Edwin E. Tucker
Role: Design, construction and field-testing of ultrafiltration unit
Title: Adjunct Faculty Member
Chemistry and Biochemistry Dept.
620 Parrington Oval, #208
University of Oklahoma
Norman, OK 73019
Tel: (405) 325-2054
Fax: (405) 325-6111
E-mail: eetucker@ou.edu

Navy/Marine Corps Contacts

Kate Landman
Role: Former Remedial Project Manager for MCB Camp Lejeune, NC
Mid Atlantic Operations
Naval Facilities Engineering Command, Engineering Field Division Atlantic Operations
Non-FedEx: 1510 Gilbert St.
FedEx: 6500 Hampton Blvd., Bldg. N-26
Norfolk, VA 23511-2699
Tel: (757) 322-4818/4173
Fax: (757) 322-4805
E-mail: landmakh@efdlant.navfac.navy.mil

Kirk Stevens
Role: Current Remedial Project Manager for MCB Camp Lejeune, NC
Naval Facilities Engineering Command, Engineering Field Division Atlantic Operations
Code EV23-KAS (Stevens)
Non-FedEx: 1510 Gilbert St.
FedEx: 6500 Hampton Blvd., Bldg. N-26
Norfolk, VA 23511-2699
Tel: (757) 322-8422
Fax: (757) 322-4805
E-mail: StevensKA@efdlant.navfac.navy.mil

Rick Raines
Role: Site 88 Manager
AC/S EMD
PSC Box 20004 (or Bldg. HP 67, Virginia Dare Road for FedEx mail)
MCB Camp Lejeune, NC 28542
Tel: (910) 451-5068
Fax: (910) 451-5997
E-mail: senusm1@clb.usmc.mil

Contractors
Duke Engineering & Services, Inc.
Role: Site characterization, PITTs, and SEAR execution
9111 Research Boulevard
Austin, TX 78758
POCs: Fred Holzmer, John Londergan, Dick Jackson, Varadarajan Dwarakanath
Tel: (512) 425-2000 (main); (360)834-6352 (Fred Holzmer)
Fax: (512) 425-2099
E-mail: fjholzme@dukeengineering.com, jtlonder@dukeengineering.com
rejacks1@dukeengineering.com, vxdwarak@dukeengineering.com

Baker Environmental, Inc.
Role: The Navy's Comprehensive, Environmental Long-Term Action Navy (CLEAN) contractor for MCB Camp Lejeune; field support for all site activities
Airport Office Park, Bldg. 3
420 Rouser Rd.
Coraopolis, PA 15108
POCs: Mark DeJohn
Tel: (412) 269-6000 (main)
Fax: (412) 269-2002
E-mail: mdejohn@mbakercorp.com

Dr. Neeraj Gupta and Dr. Lawrence Smith
Role: Cost assessment and compilation of cost and performance assessment report.
Battelle Memorial Institute
505 King Ave
Columbus, OH 43201
Tel: (614) 424-3820 (Neeraj Gupta)
Fax: (614)-424-3667
E-mail: gupta@battelle.org, smithla@battelle.org

Regulatory Contacts
Amy Axon
North Carolina DENR, Ground Water Section
Underground Injection Control Program
2278 Capitol Blvd.
Raleigh, NC 27626
Tel: (919) 715-6165
Fax: (919) 715-0058
E-mail: Amy_Axon_at_MRGWS01P@mail.ehnr.state.nc.us

Diane Rossi
NC DENR Division of Water Quality
Wilmington Regional Office
127 Cardinal Drive Ext.
Wilmington, NC 28405
Tel: (910) 395-3900
Fax: (910) 350-2004
E-mail: diane_rossi@wiro.enr.state.nc.us

Dave Lown, LG, PE
North Carolina, DENR, Superfund Section
401 Oberlin Rd. Suite 150
Raleigh, NC 27605
Tel: (919) 733-4996 ext. 278
Fax: (919) 715-3605
E-mail: david.lown@ncmail.net

Gena Townsend
EPA Region IV
Waste Management Division, Federal Facilities Branch
Atlanta Federal Center
61 Forsyth St, SW
Atlanta, GA 30303-3104
Tel: (404) 562-8538
Fax: (404) 562-8518
E-mail: townsend.gena@epamail.epa.gov

Other

Sasol (surfactant manufacturer)
12024 Vista Park Drive
Austin, TX 78726-4050
POC: Dr. Allan Nielsen
Tel: (512) 331-2466
Fax: (512) 331-2386
E-mail: anielsen@cvcnet.com

Dr. Larry Britton {formerly of Condea Vista, lead for development of custom Alfoterra surfactants}
Institute for Environmental and Industrial Science
Southwest Texas State University
601 University Dr.
San Marcos, TX 78666
Tel: (512) 245-9624
E-mail: lb34@swt.edu

APPENDIX B

DETAILS OF ESTIMATED FULL-SCALE COSTS

APPENDIX C

DETAILS OF SURFACTANT RECOVERY SYSTEM COST ANALYSIS

APPENDIX C

DETAILS OF SURFACTANT RECOVERY SYSTEM COST ANALYSIS

In preparing the following cost estimates, a number of assumptions have been made:

1. Ninety-nine percent of contaminant must be removed in the contaminant removal step prior to MEUF. Although only 95% contaminant removal was required by the State of North Carolina for the Camp Lejeune demonstration, the phenomenon of contaminant concentration by ultrafiltration necessitates higher contaminant removal in the first step. For example, if contaminants are concentrated five times by ultrafiltration, then to meet a 95% contaminant removal, the contaminant removal step must remove 99% of the contaminant initially (the 1% contaminant remaining will be concentrated up to 5% during surfactant recovery via ultrafiltration).

2. The contaminant removal system operates 24 hours/day for the duration of the remediation (i.e., during PITTs and floods).

3. Three contaminant removal processes are technically feasible:
   a. pervaporation
   b. air stripping with off-gas treatment (using no antifoam)
   c. liquid-liquid extraction (pricing based on the Akzo-Nobel MPPE system).

4. For the low-k case, surfactant concentration during plateau of flood is 1.2 wt%. (If the ratio of extraction to injection rates is 1:0.4, then the maximum extraction concentration would be 1.6 wt% for a 4 wt% injection concentration. Thus, the value of 1.2 wt% used in the estimates assumes 25% per pass loss of surfactant in the soil.) For the high-k case, surfactant concentration during plateau of flood is 0.9 wt%. These are hypothetical values, actual values would be obtained from numerical modeling.

5. The surfactant value used is comparable to that used for the subsurface remediation, i.e., $4.50 per pound of active surfactant for the 2,500 or 3,300 ft^2 scale, and $3.00 per pound of active surfactant for the 0.5- and 1.0-acre scales.

6. MEUF used to reconcentrate surfactant to 5 wt%.

7. Duration of MEUF system operation is equal to 125% of the duration of the SEAR surfactant flood.

8. Seventy-five percent of surfactant in extracted SEAR fluid is recovered by MEUF. Per assumption #4, the extracted fluid contains only 75% of the injected surfactant. Thus, the combination of soil losses and MEUF losses results in only 56% of the injected surfactant being recovered for reuse.

9. 10-year straight-line capital depreciation.

10. Three standard salvage value scenarios were evaluated. The salvage scenario selected assumes that 50% of the potential salvage value of equipment is achieved. Thus, the capital charge is the amount of depreciation due to the time of use plus 50% of the remaining salvage value (salvage value = initial capital minus the amount of depreciation).

    For the salvage value calculations, first, assume that new equipment is being purchased for the project (the worst case). Second, assume that the equipment has a potential lifetime of 10 years -

this is a pretty safe assumption for most chemical process equipment. Therefore, if the project lasted 10 years, all of the capital cost would be charged to that project. However, if the project only lasts 1 year, how much of the initial investment should be assigned? A simple answer would be 1/10 or 10%. Under those conditions, the equipment would retain 90% of its original value at the end of the project. However, that assumes that the equipment is infinitely flexible in its use - i.e., that it could be used in another project without modification. In other words, it is assumed that the salvage value of the equipment is 100% of the undepreciated amount of capital invested (in the case of the 1-year project, the salvage value would be 90% of the capital cost).

Because this is rather unlikely due to site-to-site variabilities, the end value needs to be reduced by some amount to account for its reduced value to the world. It is assumed that the company that purchased the equipment could recover 50% of the undepreciated amount of capital. So, for the 1-year project, 90% of the original capital would be undepreciated and the company could salvage 45% of the original capital (50% of the 90%). The capital charge to the project would then be the 10% reduction due to depreciated usage plus the other 45% that the company could not salvage for a total project charge of 55% of the original capital cost.

Such an assumption penalizes short-term projects because at least 50% of the original capital cost will be charged to the project, even if it only lasts one day. For a 10-year project, 100% of the capital cost is assigned, just as it should be.

Although this may seem like an odd way to do it, it is generally the procedure vendors go through to come up with lease prices. Leasing specialized equipment for 1 week, will cost per day than leasing it for a year. The main reason is that the company is assuming risk by building the equipment for a client and then assuming that the equipment can be leased later to another client. The shorter the lease, the more risk, and the more that company will charge their client to accept that risk. This was the most straightforward approach conceivable to compare costs for the same piece of equipment operated over different periods of time while still assigning a value to the "risk" associated with reusing the equipment elsewhere.

Presumably, if a project were able to make use of equipment that had been used previously, then the capital costs would be much lower. In that case, the cost numbers included herein represent the worst case.

11. It should be noted that the low cost option for shorter-term installations involves leased equipment rather than purchased equipment. For example, the 18-gpm high permeability surfactant recovery system incurs lease costs of approximately $22,000 for the MPPE system or air stripper/off-gas treatment system and approximately $22,000 for the MEUF system for 31 days of operation. Similar costs were assumed for the 6-gpm low permeability system. Based on lease and purchase estimates for the systems as well as a 50% salvage value assumption, purchasing the capital items makes economic sense if the project is expected to last on the order of six months or more. For projects lasting less than six months, leasing appears to be the low cost alternative.

12. The biological wastewater treatment system will still be required to process MEUF permeate. Despite the lower flow and biological oxygen demand (BOD) load, no reduction in cost was made.

13. Air stripping treatment will still be required for the MEUF permeate to protect the biological treatment system. A peak PCE concentration of 10,000 mg/L would result in a feed to MEUF of 100 mg/L (after 99% removal). The MEUF permeate would then have less than 10 mg/L of PCE. The biotreatment process is there to destroy the alcohol and surfactant and will probably not destroy the PCE although much of the PCE would be stripped out by aeration in the bioreactors. No specific

level of PCE was set to protect the bioreactor, but the conservative approach would be to keep the air stripper. However, off-gas treatment will not be required because 99% of the contaminant load has already been recovered. Thus, a reduction in capital and operating costs for the wastewater treatment system for the off-gas treatment component will be assigned to the recycling system. Because the Battelle cost estimate did not assume a salvage value for the off-gas treatment system, the estimated capital cost for the off-gas treatment unit will simply be subtracted off when surfactant recycling is employed.

14. 40 hours per week of technician time (plus lesser amounts for engineer oversight) will be assigned to operate the recycling system.

15. General assumptions for the low permeability (low-k) scenario:
    a. extraction flowrate = 6 gpm
    b. duration of operations for one panel = 127 days
    c. duration of surfactant flood for one panel = 58 days
    d. Cost of contaminant removal systems
        i. Air stripping w/ off-gas = $180,000 plus $25,000/yr
        ii. MPPE = $230,000 plus $25,000/yr
        iii. Pervaporation = $280,000 plus $58,000/yr
    e. Cost of MEUF = $160,000 plus $25,000/yr
    f. Recovered value from no off-gas treatment = $89,800 capital plus $4,700/yr for operating expenses (prorated)

16. General assumption for the high permeability (high-k) scenario:
    a. extraction flowrate = 18 gpm
    b. duration of operations for one panel = 24 days
    c. duration of surfactant flood for one panel = 8 days
    d. Cost of contaminant removal systems:
        i. Air stripping w/ off-gas = $270,000 plus $38,000/yr
        ii. MPPE = $260,000 plus $50,000/yr
        iii. Pervaporation = $550,000 plus $140,000/yr
    e. Cost of MEUF = $240,000 plus $40,000/yr
    f. Recovered value from no off-gas treatment = $89,800 capital plus $6,900/yr for operating expenses (prorated)

17. Figure C-1 shows the schematic for SEAR wastewater treatment without surfactant recycling.

18. Figure C-2 shows the schematic for SEAR wastewater treatment with surfactant recycling.

19. Figure C-3 shows the conceptual diagram of the full-scale SEAR system with surfactant recovery.

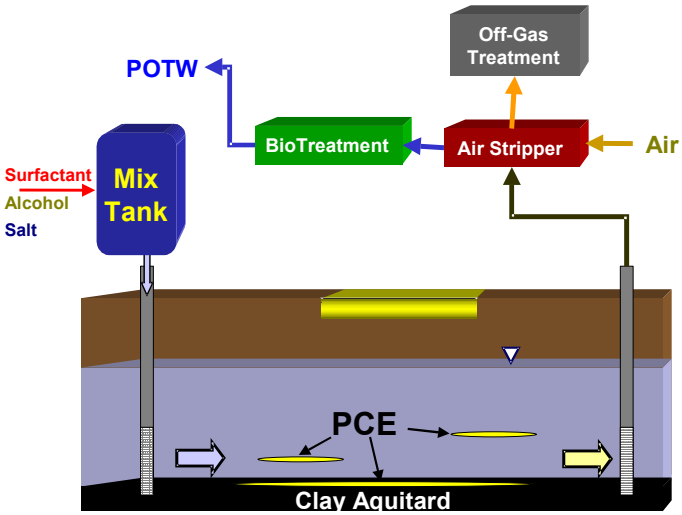

Figure C-1. Schematic Diagram of SEAR Wastewater Treatment Without Surfactant Recycling

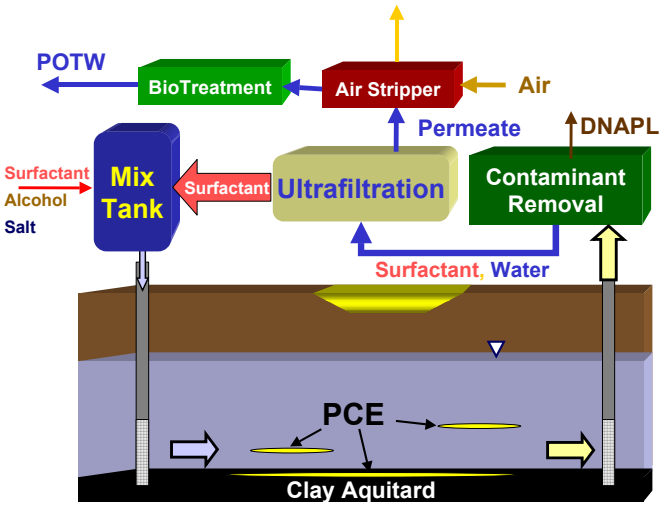

Figure C-2. Schematic Diagram of SEAR Wastewater Treatment with Surfactant Recovery

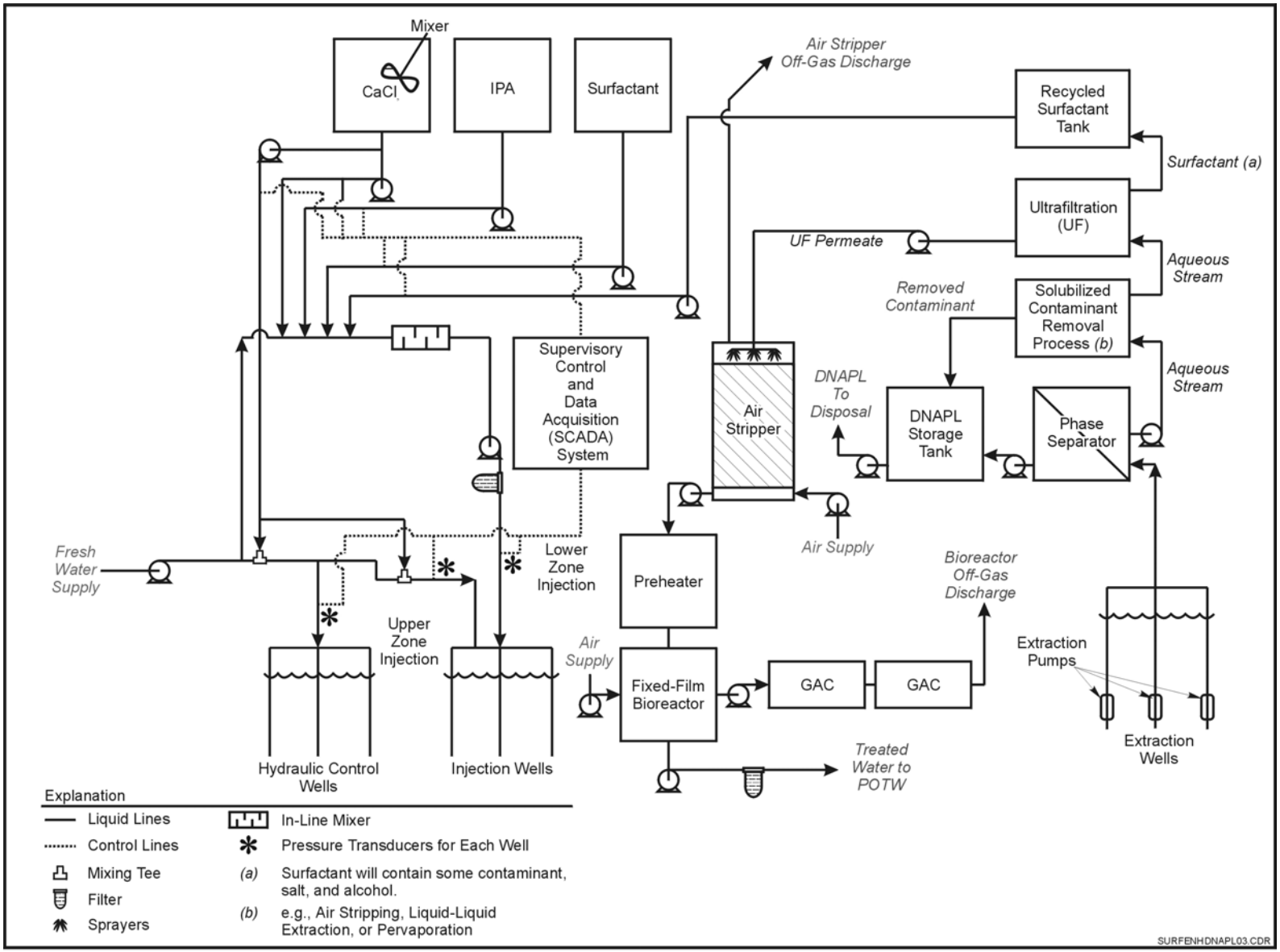

Figure C-3. Conceptual Diagram of Full-Scale SEAR System with Surfactant Recovery

APPENDIX D

ALTERNATIVE TECHNOLOGY COSTS FOR DNAPL SOURCE REMEDIATION AT SITE 88, MARINE CORPS BASE CAMP LEJEUNE

ALTERNATIVE TECHNOLOGY COSTS FOR DNAPL SOURCE REMEDIATION AT SITE 88, MARINE CORPS BASE CAMP LEJEUNE

This letter report evaluates the costs for implementing pump and treat (P&T), steam injection, and resistive heating technologies at Site 88, Marine Corps Base (MCB) Camp Lejeune, NC, under the same constraints and parameters used for surfactant-enhanced aquifer remediation (SEAR) technology cost estimates. This report was prepared under Naval Facilities Engineering Service Center (NFESC) Contract No. N47408-95-D-0730, Delivery Order No. 0112.

D.1 Pump and Treat System for DNAPL Source Containment

This section evaluates the costs to implement a P&T system in order to contain the dense, nonaqueous-phase liquid (DNAPL) source at Site 88. Because groundwater flow at the site is to the southwest, the DNAPL source can be contained by installing one or multiple extraction wells on the southwest side of the DNAPL source. The P&T system can be installed inside or outside Building 25 so that dry-cleaning operations inside are not disturbed.

One advantage of using a containment-type P&T system is that the groundwater extraction rates associated with such systems are low compared to P&T systems for plume remediation. When a low extraction rate is used, the air effluent from stripping often does not have to be treated, because the rate of volatile organic compound (VOC) discharge to the ambient air is often within regulatory limits. And, although a longer period of operation is required when a low extraction rate is used, the costs associated with that operating period are more than offset by higher efficiency (lower influx of clean water from outside the plume), lower initial capital investment (smaller treatment system), and lower annual operations and maintenance (O&M) requirements.

Another advantage of using a containment-type P&T system is that, unlike other source removal technologies, it does not require very extensive DNAPL zone characterization. However, in order to design a P&T system, the DNAPL zone must be located and its extent delineated (i.e., to determine the proper location and number of extraction wells) for effective source zone containment. Table D-1 shows a preliminary size determination for a P&T system at Site 88. Although the DNAPL at the site lies in the lower 5 ft of the aquifer, the entire 11-ft aquifer thickness is assumed to be within the influence of the extraction wells. And, although the desired capture zone width is 95 ft, capture inefficiencies along the sides will permit some clean water from the adjoining aquifer (i.e., an extra 50% volume of water) to be drawn into the wells. This safety factor of 50% ensures that any uncertainties in aquifer or DNAPL source characterization are accounted for.

Experience with P&T systems at previous sites indicates that the most efficient long-term P&T systems are operated at the minimum rate necessary to contain a plume or source zone (Cherry et al., 1996). An extraction rate of 1 gal per minute (gpm) was found to be sufficient to contain the DNAPL source at Site 88. A preliminary modeling simulation was conducted to ensure that the low permeability aquifer could sustain both a production rate of 1 gpm and to determine the number of wells required to achieve that rate. The simulation showed that four equally spaced wells, pumping at approximately 0.25 gpm each, would enable the required capture without any of the wells running dry. One challenge in this design will be to acquire P&T components that are small enough to extract at a relatively low rate of 0.25 gpm per well, but are heavy-duty enough to withstand sustained operation. For this cost evaluation, P&T system components were selected to ensure that the well pumps can withstand periods of dry operation at Site 88, if required during certain seasons. Aboveground control valves also can be used to slow down pumping rates, if required.

Table D-1. P&T System Design Basis for DNAPL Source Zone at Site 88, MCB Camp Lejeune

Item	Value	Units
Hydraulic conductivity, K	1.44	ft/d
Hydraulic gradient, I	0.015	ft/ft
Porosity, n	0.3	–
Groundwater velocity, v	0.072	ft/d
Width of DNAPL zone, w	95	ft
Depth of DNAPL zone, d	11	ft
Cross-sectional area of DNAPL zone, a	1,045	ft^2
Capture zone required	75	ft^3/d
Excess capture on sides, 50%	1.5	–
Safety factor, 50%	1.5	–
Required pumping rate	~170 (0.9)	ft^3/d (gpm)
Design pumping rate	1	gpm
Number of wells to achieve capture	4	–
Pumping rate per well	~0.25	gpm
PCE level in water near DNAPL zone	150	mg/L
PCE level allowed in discharge water	1	mg/L
Air stripper removal efficiency required	99.33%	–
PCE level in air effluent from stripper	1.8	lb/day
PCE level allowed in air effluent	6	lb/day

D.1.1 Capital Investment for the P&T System. The P&T system designed for this application is illustrated in the schematic diagram shown in Figure D-1. Table D-2 shows additional details on the major components selected for the P&T system. Pneumatically driven pulse pumps, which are used in each well, are safer than electrical pumps in the presence of perchloroethylene (PCE) vapors in the wells. This type of pump can sustain low flowrates during continuous operation. Stainless steel (SS) and Teflon™ construction materials ensure compatibility with the high concentrations (up to 150 mg/L PCE) of dissolved solvent and any free-phase DNAPL that may be expected. Extraction wells are assumed to be 20 ft deep, 2 inches in diameter, and have stainless steel screens with polyvinyl chloride (PVC) risers. Wells are screened in the lower 5 ft of the aquifer.

The aboveground treatment system consists of a DNAPL separator and air stripper. Very little free-phase solvent is expected and the separator may be disconnected after the first year of operation, if desired. The air stripper used is a low-profile tray-type air stripper. In contrast to conventional packed towers, low-profile strippers have a smaller footprint, much smaller height, and can handle large air:water ratios (i.e., a higher mass transfer rate of contaminants) without generating significant pressure losses. Because of their small size and easy installation, they are used for groundwater remediation more often than packed towers. The capacity of the air stripper selected is much higher than 1 gpm, so that additional flow (or additional extraction wells) can be handled if required.

The ability of the air stripper to handle high air:water ratios ensures that PCE and other minor volatile components are removed to the desired (< 1 mg/L) levels. The treated water effluent from the air stripper is discharged to the sewer. At the low groundwater extraction rate required, the resulting contaminant mass in the air effluent from the stripper is less than 2 lb/day, which is below a typical regulatory limit of 6 lb/day. The air effluent can be discharged without further treatment.

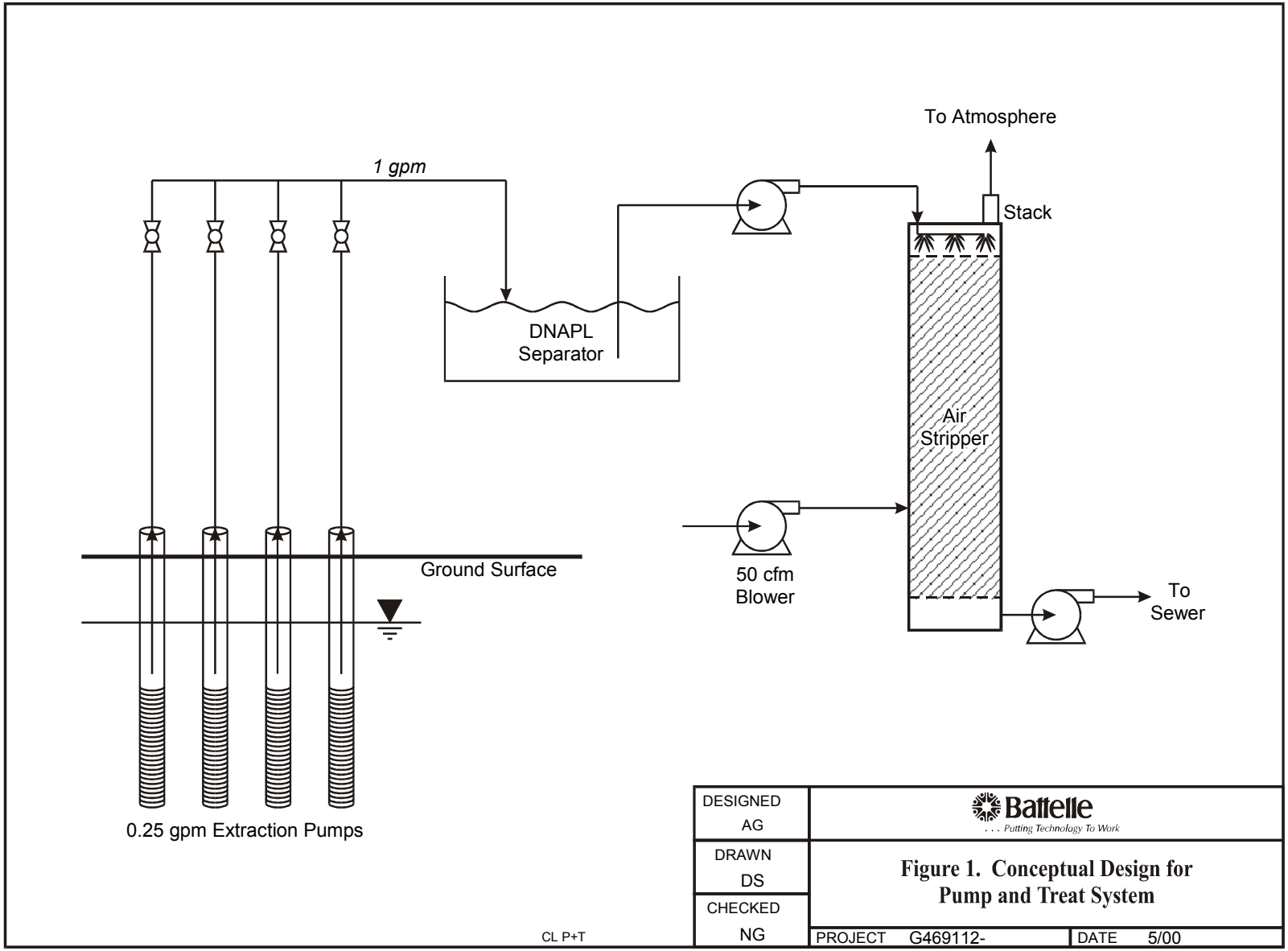

Figure D-1. Conceptual Design for P&T System

Table D-2. Capital Investment for a P&T System at Site 88, MCB Camp Lejeune

Item	#	Units	Unit Price	Cost	Basis
Design/Procurement					
Engineer	160	hrs	$70	$11,200	–
Drafter	40	hrs	$30	$1,200	–
Hydrologist	160	hrs	$70	$11,200	–
Contingency	1	ea	$10,000	$10,000	10% of total capital
TOTAL				$33,600	–
Pumping System					
Extraction wells	4	ea	$2,149	$8,596	2-inch, 20-ft-deep, 5-ft SS screen; PVC; includes installation
Pulse pumps	4	ea	$595	$2,380	2.1 gpm max., 1.66-inch O.D. for 2-inch wells; handles solvent contact; pneumatic; with check valves
Controllers	4	ea	$1,115	$4,460	Solar powered or 110 V; with pilot valve
Air compressor	1	ea	$645	$645	100 psi (125 psi max), 4.3 cfm continuous duty, oil-less; 1 hp
Miscellaneous fittings	1	ea	$5,000	$5,000	Estimate
Tubing	80	ft	$3	$271	1/2-inch O.D., chemical resistant; well to surface manifold
TOTAL				$21,352	–
Treatment System					
Piping	100	ft	$3	$339	Manifold; wells to DNAPL separator; 0.5-inch chemical resistant
Trench	1	day	$320	$320	Trencher & operator; install piping below ground surface
DNAPL separator tank	1	ea	$120	$120	125 gal; high grade steel with epoxy lining; conical bottom with discharge
Air stripper feed pump	1	ea	$460	$460	0.5 hp; up to 15 gpm
Piping	10	ft	$3	$34	0.5 inch, chemical resistant; feed pump to stripper
Water flowmeter	1	ea	$160	$160	Low flow; with readout
Low-profile air stripper with control panel	1	ea	$9,400	$9,400	1-25 gpm, 4 tray; SS shell and trays
Pressure gauge	1	ea	50	$50	SS; 0-30 psi
Blower	1	ea	$1,650	$1,650	5 hp
Airflow meter	1	ea	$175	$175	Orifice type; 0-50 cfm
Stack	10	ft	$2	$20	2-inch, PVC, lead out of housing
Stripper sump pump	1	ea	$130	$130	To sewer
Misc. fittings, switches	1	ea	$10,000	$10,000	Estimate (sample ports, valves, etc.)
TOTAL				$22,858	–

Table D-2. Capital Investment for a P&T System at Site 88, MCB Camp Lejeune (continued)

Item	#	Units	Unit Price	Cost	Basis
Site Preparation					
Concrete pad	400	ft^2	$3	$1,200	20 ft × 20 ft with berm; for air stripper and associated equipment
Berm	80	ft	$7	$539	–
Power drop	1	ea	$5,838	$5,838	230 V, 50 Amps; pole transformer and licensed electrician
Monitoring wells	7	wells	$2,149	$15,043	Verify source containment; 2-inch PVC with SS screens
Sewer connection fee	1	ea	$2,150	$2,150	–
Sewer pipe	300	ft	$10	$3,102	–
Housing	1	ea	$2,280	$2,280	20 ft × 20 ft; shelter for air stripper and associated equipment
TOTAL				$30,152	–
Installation/Startup of Treatment System					
Engineer	40	hrs	$70	$2,800	Labor
Technician	320	hrs	$30	$9,600	Labor
TOTAL				$12,400	–
TOTAL CAPITAL INVESTMENT				$120,362	–

The piping from the wells to the air stripper is run through a 1-ft-deep covered trench. The air stripper and other associated equipment are housed on a 20-ft × 20-ft concrete pad, and are covered by a basic shelter. The Base will provide a power drop (through a pole transformer) and a licensed electrician will be used for the power hookups. Meters and control valves are strategically placed to control water and airflow through the system.

To ensure that the desired containment is being achieved, the existing monitoring system at the site will have to be supplemented with seven long (i.e., 10 ft) screen monitoring wells.

D.1.2 Annual Cost of the P&T System. The annual costs of P&T are shown in Table D-3 and include annual O&M and monitoring costs. Annual O&M costs include the labor, materials, energy, and waste disposal cost of operating the system and routine maintenance (including scheduled replacement of seals, gaskets, and O-rings). Routine monitoring of the stripper influent and effluent is done through ports on the feed and effluent lines on a monthly basis. Groundwater monitoring is conducted on a quarterly basis through seven monitoring wells. All water samples are analyzed for PCE and other chlorinated volatile organic compound (CVOC) by-products.

D.1.3 Periodic Maintenance Cost. In addition to the routine maintenance described above, periodic maintenance will be required to replace worn-out equipment, as shown in Table D-3. Based on manufacturers' recommendations for the respective equipment, replacement should be done once every 10 or 20 years. In general, it is assumed that all equipment involving moving parts will be replaced once every 10 years, whereas other equipment will be changed every 20 years.

D.1.4 Present Value (PV) Cost of P&T. Because a P&T system is operated for the long term, a 30-year period of operation is assumed for estimating cost. Because capital investment, annual costs, and periodic maintenance costs occur at different points in time, a life cycle analysis or present value (PV) analysis is conducted to estimate the long-term cost of P&T in today's dollars. This life cycle analysis

Table D-3. Annual and Periodic Cost for P&T System

Item	#	Units	Unit Price	Cost	Basis
Annual Operation & Maintenance					
Engineer	80	hrs	$70	$5,600	Oversight
Technician	500	hrs	$30	$15,000	Routine operation; annual cleaning of air stripper trays, routine replacement of parts; any waste disposal
Replacement materials	1	ea	$2,000	$2,000	Seals, O-rings, tubing, etc.
Electricity	52,560	kW-hrs	$0.10	$5,256	8 hp (~6 kW) over 1 year of operation
Sewer disposal fee	525,600	gal/yr	$0.00152	$799	–
Waste disposal	1	drum	$80	$200	30 gal drum; DNAPL, if any; haul to incinerator
TOTAL				**$28,855**	–
Annual Monitoring					
Stripper effluent air	12	smpls	$120	$1,440	Discharge quality; monthly; CVOCs
Stripper effluent water	14	smpls	$120	$1,680	Discharge quality confirmation; monthly; CVOC analysis; MS, MSD
Monitoring wells	36	smpls	$120	$4,320	7 wells; quarterly; MS, MSD
Sampling materials	1	ea	$500	$500	Miscellaneous
Technician	100	hrs	30	$3,000	Quarterly monitoring labor (from wells) only; weekly monitoring (from sample ports) included in O&M cost
Engineer	80	hrs	70	$5,600	Oversight; quarterly report
TOTAL				**$16,540**	–
TOTAL ANNUAL COST				**$45,395**	–
Periodic Maintenance, Every 10 years					
Pulse pumps	4	ea	$595	$2,380	As in Table D-2
Controllers	4	ea	$1,115	$4,460	As in Table D-2
Air compressor	1	ea	$645	$645	As in Table D-2
Air stripper feed pump	1	ea	$460	$460	As in Table D-2
Blower	1	ea	$1,650	$1,650	As in Table D-2
Stripper sump pump	1	ea	$130	$130	As in Table D-2
Miscellaneous materials	1	ea	$1,000	$1,000	Estimate
Technician	80	hrs	$30	$2,400	Labor
TOTAL				**$13,125**	–
Periodic Maintenance, Every 20 years					
Air stripper	1	ea	$9,400	$9,400	As above
Water flowmeter	1	ea	160	$160	As above
Airflow meter	1	ea	175	$175	As above
Technician	80	hrs	$30	$2,400	Labor
Miscellaneous materials	1	ea	$1,000	$1,000	Estimate
TOTAL				**$13,135**	–

approach is recommended for long-term remediation applications by the guidance provided in the *Federal Remediation Technologies Roundtable's Guide to Documenting and Managing Cost and Performance Information for Remediation Projects* (Revised Version) (United States Environmental Protection Agency [U.S. EPA], 1998). The PV cost then can be compared with the cost of faster (DNAPL source reduction) remedies.

Table D-4 shows the results of PV cost-estimate calculations made for a P&T system. This cost-estimate method divides each year's cost by a discount factor that reflects the rate of return foregone by incurring that cost (see Equation D-1). The cost incurred at time t = 0 (i.e., the current year) is the initial capital investment in equipment and labor to design, procure, and build the P&T system; every year after t = 0, a cost is incurred to operate and maintain the P&T system (see Equation D-2). A real rate of return (or discount rate), r, of 2.9% is used in the analysis as per recent U.S. EPA guidance on discount rates (U.S. EPA, 1999).

Table D-4. Present Value of P&T System Costs for 30 Years of Operation

Year	Annual Cost[(a)]	PV of Annual Cost
0	$120,362	$120,362
1	$45,395	$44,116
2	$45,395	$42,872
3	$45,395	$41,664
4	$45,395	$40,490
5	$45,395	$39,349
6	$45,395	$38,240
7	$45,395	$37,162
8	$45,395	$36,115
9	$45,395	$35,097
10	$58,520	$43,969
11	$45,395	$33,147
12	$45,395	$32,212
13	$45,395	$31,305
14	$45,395	$30,422
15	$45,395	$29,565
16	$45,395	$28,732
17	$45,395	$27,922
18	$45,395	$27,135
19	$45,395	$26,370
20	$71,655	$40,452
21	$45,395	$24,905
22	$45,395	$24,203
23	$45,395	$23,521
24	$45,395	$22,858
25	$45,395	$22,214
26	$45,395	$21,588
27	$45,395	$20,979
28	$45,395	$20,388
29	$45,395	$19,814
30	$58,520	$24,822
TOTAL[(b)]	**$1,534,722**	**$1,051,990**

(a) Annual cost in Year zero is equal to the capital investment. Annual cost in other years is annual O&M cost plus annual monitoring cost. Annual costs in Years 10, 20, and 30 include annual O&M, annual monitoring, and periodic maintenance.

(b) Second column cost of $1,534,722 is the total of all the annual costs in today's dollars without discounting. Third column cost of $1,051,990 is the total of all the annual costs with discounting at 2.9%.

$$PV_{\text{P\&T Costs}} = \sum \frac{\text{Annual Cost in Year 1}}{(1+r)^1} \tag{D-1}$$

$$PV_{\text{P\&T costs}} = \text{Capital Investment} + \frac{\text{Annual cost in Year 1}}{(1+r)^1} + \ldots + \frac{\text{Annual cost in Year n}}{(1+r)^n} \tag{D-2}$$

The total PV cost of purchasing, installing, and operating a 1-gpm P&T source containment system for 30 years is estimated to be $1,052,000 (rounded to the nearest thousand). Discounting real costs (or costs in today's dollars) with a real rate of return (rate of return expected before taking inflation into account) ensures that the total PV cost is the same, regardless of the true level of inflation in future years. Without discounting (r = 0), the total PV cost of the P&T system over 30 years would be $1,535,000 in today's dollars (see total in Column 2, Table D-4). The total in Column 2 is the simple sum of all the annual costs (in today's dollars), without any expectation of a return on investment, as may be expected in a government agency. Because this report is directed primarily towards government sites, this undiscounted PV cost number is used for comparison with the alternative technologies.

Long-term remediation costs typically are estimated for 30-year periods as mentioned above. Although the DNAPL source may persist for a much longer time, the contribution of costs incurred in later years to the PV cost of the P&T system is not very significant and the total 30-year cost is indicative of the total cost incurred for this application. This effect on costs can be seen from the fact that in Years 27, 28, and 29, the differences in annual PV costs are not as significant as the difference in, say, Years 1, 2, and 3. Because of discounting, costs incurred in later years have a lower impact on the total PV cost than costs that are incurred in earlier years. Discounting is a way of taking into account the benefit of postponing costs to later years; postponing costs frees up today's money for other uses. The effects of discounting and inflation are illustrated in the additional scenarios discussed below:

- So far, it has been possible to ignore inflation because the examples have involved real dollars (today's dollars) and real rates of return. Columns 4 to 7 in Table D-5 illustrate another way of looking at the role inflation plays in future years. In Columns 4 and 6, annual costs (obtained using values in Column 2) are inflated by 2% each year to reflect the effects of inflation on the nominal dollars (paper dollars) that will be paid out to cover P&T costs, in the year that they are incurred. The total nominal P&T dollars paid out over 30 years add up to $2,078,000 in both Columns 4 and 6.

- Nominal (inflated) costs incurred each year (Columns 4 and 7) can be normalized to the same base year (i.e., Year 2000, or t = 0) by adjusting each year's cost for inflation and rate of return. The amounts in Column 5 are calculated by adjusting the dollar amounts in Column 4 by 2% for inflation; in Column 7, Column 6 costs are adjusted for both inflation and a 2.9% real rate of return. The total PV costs in Columns 5 and 7 are $1,535,000 and $1,052,000, respectively. These totals are the same as the totals in Columns 2 and 3, which were obtained using real dollars and real discount rates.

- As an example of how costs would vary if a P&T system were operated for a much longer period of operation than the standard 30-year period of calculation, Figure D-2 plots the total costs of operating a P&T system for 100 years instead of for 30 years. The solid line or the PV cost curve flattens with each passing year (as discounting reduces the impact of costs incurred in future years). Assuming

Table D-5. PV of P&T System Costs with Varying Levels of Inflation and Discounting

Year (n)	Year 2000 dollars and 2.9% Real Rate of Return (Base Case)		2% Inflation and 0% Real Rate of Return (Illustration)		2% Inflation and 2.9% Real Rate of Return (Illustration)	
	Annual Cost [a] (in Year 2000 dollars)	PV (in Year 2000 dollars)	Annual Cost (in Year n dollars)	PV (in Year 2000 dollars)	Annual Cost (in Year n dollars)	PV (in Year 2000 dollars)
0	$120,362	$120,362	$120,362	$120,362	$120,362	$120,362
1	$45,395	$44,116	$46,303	$45,395	$46,303	$44,116
2	$45,395	$42,872	$47,229	$45,395	$47,229	$42,872
3	$45,395	$41,664	$48,174	$45,395	$48,174	$41,664
4	$45,395	$40,490	$49,137	$45,395	$49,137	$40,490
5	$45,395	$39,349	$50,120	$45,395	$50,120	$39,349
6	$45,395	$38,240	$51,122	$45,395	$51,122	$38,240
7	$45,395	$37,162	$52,145	$45,395	$52,145	$37,162
8	$45,395	$36,115	$53,187	$45,395	$53,187	$36,115
9	$45,395	$35,097	$54,251	$45,395	$54,251	$35,097
10	$58,520	$43,969	$71,336	$58,520	$71,336	$43,969
11	$45,395	$33,147	$56,443	$45,395	$56,443	$33,147
12	$45,395	$32,212	$57,572	$45,395	$57,572	$32,212
13	$45,395	$31,305	$58,723	$45,395	$58,723	$31,305
14	$45,395	$30,422	$59,898	$45,395	$59,898	$30,422
15	$45,395	$29,565	$61,096	$45,395	$61,096	$29,565
16	$45,395	$28,732	$62,318	$45,395	$62,318	$28,732
17	$45,395	$27,922	$63,564	$45,395	$63,564	$27,922
18	$45,395	$27,135	$64,835	$45,395	$64,835	$27,135
19	$45,395	$26,370	$66,132	$45,395	$66,132	$26,370
20	$71,655	$40,452	$106,476	$71,655	$106,476	$40,452
21	$45,395	$24,905	$68,804	$45,395	$68,804	$24,905
22	$45,395	$24,203	$70,180	$45,395	$70,180	$24,203
23	$45,395	$23,521	$71,583	$45,395	$71,583	$23,521
24	$45,395	$22,858	$73,015	$45,395	$73,015	$22,858
25	$45,395	$22,214	$74,475	$45,395	$74,475	$22,214
26	$45,395	$21,588	$75,965	$45,395	$75,965	$21,588
27	$45,395	$20,979	$77,484	$45,395	$77,484	$20,979
28	$45,395	$20,388	$79,034	$45,395	$79,034	$20,388
29	$45,395	$19,814	$80,614	$45,395	$80,614	$19,814
30	$58,520	$24,822	$106,001	$58,520	$106,001	$24,822
TOTAL	**$1,534,722[b]**	**$1,051,990[b]**	**$2,077,576**	**$1,534,722**	**$2,077,576**	**$1,051,990**

(a) Annual cost in Year zero is equal to the capital investment. Annual cost in other years is annual O&M cost plus annual monitoring cost. Annual costs in Years 10, 20, and 30 include annual O&M, annual monitoring, and periodic maintenance.

(b) Second column cost of $1,534,722 is the total of all the annual costs in today's dollars without discounting. Third column cost of $1,051,990 is the total of all the annual costs with discounting at 2.9%.

a real rate of return, r, of 2.9%, the total PV cost of P&T after 100 years is estimated at $1,649,000. Without discounting (expected rate of return is assumed as zero), as may be the case for a government entity, the total PV cost of P&T after 100 years would be almost $5 million. If nominal dollars (dollars inflated at the rate of 2% each year) are used instead of real dollars (today's dollars), the total dollars paid out over 100 years would be approximately $15 million.

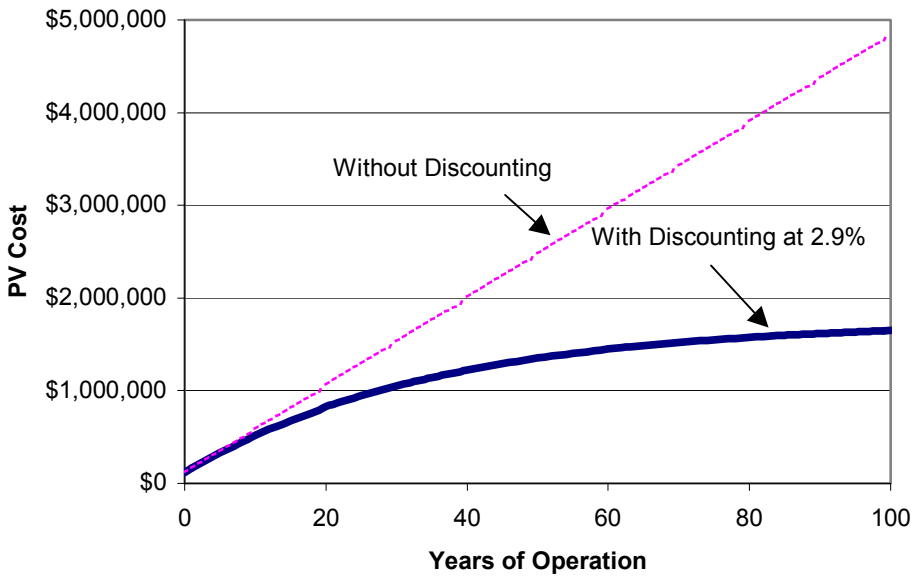

Figure D-2. P&T System Costs Over 100 Years of Operation

D.2 Cost of Other Alternatives (Steam Injection and Resistive Heating)

In addition to a P&T system, two other alternative technologies—steam injection and resistive heating—were considered for DNAPL source containment at Site 88. Vendors for these two technologies were contacted and were asked to provide budget cost estimates for full-scale application of their technologies for the entire DNAPL source zone at Site 88, as described in Table D-6.

- The steam injection cost estimate was based on application of steam-enhanced extraction/hydrous pyrolysis oxidation (SEE/HPO™) by Integrated Water

Table D-6. Site Conditions at Site 88, MCB Camp Lejeune

Parameter	Value
Area to be remediated[(a)]	2,500 ft^2 (232 m^2)
Depth to aquitard	18-20 ft bgs (5.5 to 6.1 m bgs)
Depth to water table	7-9 ft (2.1 to 2.7 m)
Porosity of aquifer	0.3
DNAPL zone vertical thickness in aquifer	5 ft (1.5 m)
Hydraulic conductivity of the lower 5 ft of aquifer	5×10^{-4} cm/sec for the upper 2.5 ft of the contaminated thickness (and for the uncontaminated aquifer above), 1×10^{-4} cm/sec for the middle 1.5 ft, and 5×10^{-5} cm/sec for the bottom 1 ft
Hydraulic conductivity of clay layer	5.76×10^{-4} ft/d (2×10^{-7} cm/sec)
DNAPL zone volume to be remediated	12,500 ft^3 (354 m^3)
Approximate volume of DNAPL (PCE) in the aquifer	609 gal (2% of pore space on average)
DNAPL distribution	DNAPL occupies 0.4-4% of pore space
DNAPL (PCE) cleanup target	Remove at least 441 gal of DNAPL so that no more than 168 gal (or 0.6% of pore space on average) of DNAPL is left behind (72% removal efficiency)

(a) Note that about half the DNAPL source area lies under Building 25 (the dry-cleaning building).

Resources (IWR), Inc. (Parkinson, 2000). Steam injection mobilizes DNAPL toward extraction wells by injecting steam to thermally reduce surface tension. In the hydrous pyrolysis variation, air is injected along with the steam to break down CVOCs.

- The resistive heating cost estimate was based on application of six-phase heating (SPH™) by Current Environmental Solutions (CES), Inc. (Fleming, 2000). SPH™ uses an array of electrodes installed in the ground to generate resistive heating of the soil and groundwater. The DNAPL is volatilized to the vadose zone and captured by means of a vapor extraction system.

In both technologies, the fluids recovered aboveground require additional treatment before they are discharged to a sewer. By the very nature of their application, both steam injection and resistive heating will treat the entire 11 ft of aquifer, not just the lower 5 ft. Neither of the two vendors indicated any additional technology-specific characterization requirements, beyond what may have already been done to delineate the hydrogeology and DNAPL distribution in the source region.

D.2.1 Cost of Steam Injection. As seen in Table D-7, the adjusted total cost estimate of the steam injection technology for treatment of the Site 88 DNAPL source is $1,195,000. The vendor had included

Table D-7. Steam Injection Costs Estimated for Site 88, MCB Camp Lejeune

Cost Item	Design Basis	Estimated Cost
	Capital Investment	
Additional site characterization	No additional items beyond DNAPL source characterization	$0
Treatability testing	None required	$0
Design/Modeling	Thermal/hydrologic modeling, design	$70,000
Site preparation	Prepare site for drilling	$20,000
Equipment (leased from the vendor for this remediation project)	Steam boiler, steam lines, liquid ring vacuum pump, heat exchanger, water knockout tank, DNAPL-water separator, shallow-tray air stripper, thermal oxidizer, transfer tanks, transfer pumps	$234,000
Mobilization/Setup	Equipment set up, installation of 15 injection-extraction wells	$320,000
Demobilization/Final report	Demobilize equipment, abandon wells	$20,000
Monitoring system installation	Subsurface thermal monitoring array, process/compliance monitoring equipment	$37,500
	Subtotal Capital Investment Cost	***$701,500***
	O&M Costs	
Operations	Four to five months of operation; on-site supervisor and assistant; 7 days per week, 12 hr per day	$191,000
Materials	Water softeners for boiler feed water; miscellaneous supplies	$20,000
Utilities	Fuel for steam boiler and thermal oxidizer, electricity for pumps	$100,000
Waste disposal	Condensate, extracted groundwater treatment with air stripper, thermal oxidizer	$90,000
Maintenance	Minimal	$10,000
Monitoring/analysis	Compliance and process monitoring	$82,000
	Subtotal O&M Cost	***$493,000***
	TOTAL REMEDIATION COST	**$1,194,500**

a small cost for additional site characterization in their estimate, but this cost was eliminated for this evaluation because the cost seemed to be related to DNAPL confirmation rather than remediation design. The design basis for these cost items also is shown in Table D-7. The steam injection process is estimated to require about four to five months for completion. Evacuation of Building 25 would be required during this period, as isolating the building from the remedial action would be impractical.

Different variations of the steam injection technology are being demonstrated at the Visalia, Portsmouth, and Cape Canaveral sites. Based on the experience at these sites, the vendor proposes to install the steam injection wells in an array surrounding the DNAPL source zone, and will be placed near the center of the DNAPL zone. This configuration is expected to drive the DNAPL towards the center of the source zone and prevent migration.

D.2.2 Cost of Resistive Heating. As seen in Table D-8, the adjusted total cost estimate of the resistive heating technology for treatment of the Site 88 DNAPL source is $639,000. All cost items in the table were provided by the vendor (except where footnoted). The footnoted items (namely, Monitoring System Installation under capital investment and Monitoring/Analysis under O&M) are those that this vendor prefers the site managers should handle. The cost estimates used for these two footnoted items in

Table D-8. Resistive Heating Costs Estimated for Site 88, MCB Camp Lejeune

Cost Item	Design Basis	Estimated Cost
	Capital Investment	
Additional site characterization	No additional items beyond DNAPL source characterization	$0
Treatability testing	None required	$0
Design/Modeling	Design drawings and text to support regulatory approval; addendum to site safety plan; TOC content of soil assumed to be 1%; 53 days of heating to reach remediation goal	$29,400
Site preparation	Power supply, 600 amps, 480 V, three-phase; to be arranged by site managers	$15,000
Equipment (leased from the vendor for this remediation project); Mobilization/Setup	500 kW transformer; 12 electrodes, 8-inch diameter; 15-hp vapor extraction blower; condenser; granular activated carbon; includes about 6% extra cost to complete installation to grade	$228,000
Demobilization/Final report	Demobilize equipment, abandon wells	$37,300
Monitoring system installation	Subsurface thermal monitoring array, process/compliance monitoring equipment	$37,500[(a)]
	Subtotal Capital Investment Cost	***$347,200***
	O&M Costs	
Operations	Operating labor, maintenance	$85,900
Materials	Carbon purchase and disposal cost included in waste disposal category	$0
Utilities	Electricity, 447,000 kW-hrs	$30,200
Waste disposal	3 tons of soil cuttings; 102,000 gal of condensate, carbon disposal arranged by site managers	$94,000
Maintenance	Included in operations	$0
Monitoring/Analysis	Compliance and process monitoring	$82,000[(a)]
	Subtotal O&M Cost	***$292,100***
	TOTAL REMEDIATION COST	**$639,300**

(a) Vendor did not provide these items. Cost of monitoring system and monitoring/analysis were assumed to be the same as for steam injection, both of which are thermal technologies.

Table D-8 are the same as those provided by the steam injection technology vendor in Table D-7. Because both remedial technologies are thermal technologies that rely on mobilization/volatilization and capture of DNAPL, the monitoring costs are likely to be relatively identical. The resistive heating technology vendor assumed that the treatment area based on the actual shape of the DNAPL zone was slightly higher than the 2,500-ft^2 value provided in Table D-6; however, for this budget estimate, this discrepancy was ignored. The vendor based the resistive heating cost estimate on vendor experience at 11 sites where this technology has been applied.

The presence of Varsol™ and any residual surfactant from the surfactant enhanced aquifer remediation (SEAR) demonstration is likely to increase the total organic content (TOC) of the soil and, therefore, the time required for remediation by resistive heating. The vendor projects that the remediation at Site 88 can be done in three to four months (three to four weeks for mobilization/demobilization, two weeks to reach boiling temperatures, and 8 weeks at boiling steady state). The cost estimate assumes that all subsurface equipment will be completed to grade, so evacuating Building 25 would not be required except during installation of the electrodes and monitoring equipment. At recent sites, the vendor has grounded the top portion of the electrodes so that aboveground activities can continue. DNAPL migration will be prevented by installing electrodes outside and around the edge of the DNAPL source zone. Thermocouple bundles and groundwater monitoring wells around the perimeter of the source will be used to monitor the potential migration of thermal influences and DNAPL.

D.3 Summary of Technology Costs

Table D-9 summarizes the total cost of SEAR and other alternative technologies considered for remediation of the DNAPL source zone at Site 88, MCB Camp Lejeune. All three alternatives (and SEAR) have been used previously at various sites for DNAPL source remediation; however, their relative technical merits under different site conditions may vary, and these performance advantages/limitations have not been considered at the cost-evaluation level represented in this report. It also is assumed that SEAR and the alternative thermal technologies will treat the DNAPL source zone to a point where natural attenuation will be able to address any residual plume; this assumption does not apply to the P&T

Table D-9. Summary of SEAR and Alternative Technology Costs for Full-Scale Application for Remediation of the DNAPL Source Zone at Site 88, MCB Camp Lejeune

Cost Category	SEAR[a]	P&T System[a]	Steam Injection[a]	Resistive Heating[a]
Capital Investment	$890,000	$120,000	$702,000	$347,000
Contaminant Disposal Costs	$3,800	$30,000[b]	$90,000	$94,000
O&M Cost[c]	$ 498,100	$1,385,000[b]	$403,000	$198,000
Total (PV) Cost	**$1,391,900**	**$1,535,000[c,d]**	**$1,195,000**	**$639,000**

(a) All costs rounded to the nearest thousand. Post-remediation action required to control any residual plume is not included. Costs of site characterization of the DNAPL source zone before or after treatment is not included for any technology.
(b) $1,415,000 ($1,385,000 O&M cost and $30,000 contaminant disposal cost) is the undiscounted (rate of return = 0) PV of the recurring and periodic O&M costs in today's dollars spread over 30 years of operation. This total includes $45,000 of recurring annual operating and maintenance (O&M) cost incurred in every year of operation, $13,000 in periodic maintenance costs incurred every 10 years, and $13,000 in periodic maintenance costs incurred every 20 years.
(c) O&M costs not including contaminant disposal.
(d) $1,535,000 is the undiscounted (rate of return = 0) PV cost over 30 years of operation. This total is the sum of the initial capital invested and the annual real costs over 30 years. If P&T were to be continued for 100 years, the total undiscounted PV cost would be almost $5 million.

technology, as it is intended to achieve containment rather than remediation. The posttreatment cost of monitored natural attenuation is not included for any of the technologies. For any of the technologies under consideration, costs of pre- and posttreatment site characterization of the DNAPL source have not been included. It is assumed that the site owners will bear the cost of pre- and posttreatment characterization, and that technology vendors will be presented with a well-characterized site.

SEAR, steam injection, and resistive heating are source remediation technologies with applications that can be completed in a few months. P&T is a long-term source control technology, and the total cost for this option is based on the PV of all the costs incurred over a 30-year period of application.

D.4 References

Cherry, J., S. Feenstra, and D. Mackay. 1996. "Concepts for the Remediation of Sites Contaminated with Dense Non-Aqueous Phase Liquids (DNAPLs)." In J. Pankow and J. Cherry (eds.), *Dense Chlorinated Solvents and Other DNAPLs in Groundwater*. Portland, OR: Waterloo Press, 522 pp.

Fleming, D. 2000. Personal communication from D. Fleming, CES, Inc., Bellevue, WA. May.

Parkinson, D. 2000. Personal communication from D. Parkinson, IWR, Inc., Santa Barbara, CA. May.

United States Environmental Protection Agency. 1998. Guide to Documenting and Managing Cost and Performance Information for Remediation Projects (Revised Version). EPA/542/B-98/007. Prepared by the Member Agencies of the Federal Remediation Technologies Roundtable. October. Available at: www.frtr.gov/pubs.html.

United States Environmental Protection Agency. 1999. Revisions to OMB Circular A-94 on Guidelines and Discount Rates for Benefit-Cost Analysis. 55 FR 8722.

U.S. EPA, see United States Environmental Protection Agency.