Final
November 4, 1999

COST AND PERFORMANCE REPORT

Groundwater Extraction and Treatment
Logistics Center Operable Unit
Fort Lewis, Washington

November 1999

SITE INFORMATION

IDENTIFYING INFORMATION

Site Name: Logistics Center Operable Unit
Location: Ft. Lewis, Washington
ROD Date: September 25, 1990
CERCLIS #: WA7210090067
Technology: Groundwater Extraction and Treatment (Air Stripping)
Type of Action: Remedial

Figure 1 shows the location of Fort Lewis in Washington State, and the location of the Logistics Center at Fort Lewis.

TECHNOLOGY APPLICATION

Period of Operation: Ongoing. Treatment system operation began in August 1995.

Quantity of Material Treated During Application (1,10): As of August 1998, 2,146,605,000 gallons of groundwater had been extracted and treated by the I-5 treatment system, and 484,477,900 gallons had been extracted and treated by the East Gate treatment system. As of September 1997, it was estimated that 891 pounds of TCE had been removed by the I-5 system and 1,881 pounds had been removed by the East Gate system.

BACKGROUND

Site Background (4):

- Ft. Lewis is located on 86,000 acres approximately 12 miles south of the city of Tacoma, Washington. The Logistics Center occupies approximately 650 acres and is bounded to the northwest by Interstate 5 (I-5), to the north by the American Lake Gardens Tract, to the east by outlying areas of the Ft. Lewis installation and to the southwest by Madigan Army Medical Center.

- Ft. Lewis was established in 1917 and has been in continuous use since then. The current Logistics Center site was initially developed in 1941 when the Ft. Lewis Quartermaster Motor Base was constructed. In 1942 the facility was renamed the Mount Rainier Ordnance Depot, and was converted ordnance jurisdiction operations. The ordnance depot was operated until 1963. In 1963, the facility was turned over to the Logistics Center as the primary non-aircraft maintenance facility for the post.

SIC Code: 9711 (National Security)

Waste Management Practice(s) that Contributed to Contamination: Disposal of waste solvents in excavated trenches, which were subsequently filled with soil. Waste solvents were disposed as free liquids and as liquids contained in drums.

FTLEWIS1.DWG DC-RTG 4/9/99

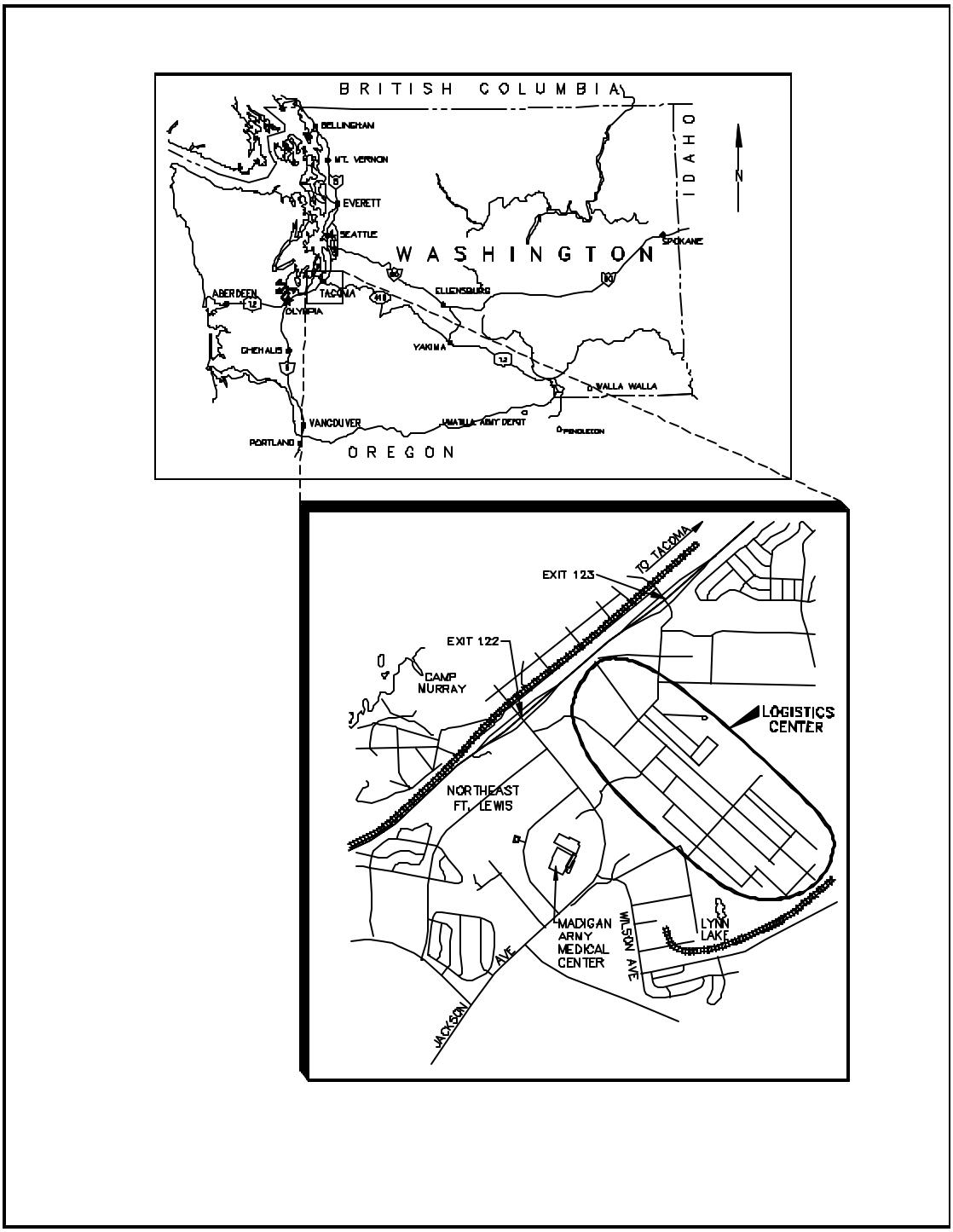

Figure 1. Location of the Logistics Center at Fort Lewis

Site Operational History (4):

Historical operations at the Logistics Center site have included degreasing of parts and equipment using trichloethylene (TCE) and trichloroethane (TCA). Degreasing was performed using TCE until the mid-1970s, at which point TCE was replaced with TCA. Historically, waste TCE was disposed along with waste oils in the East Gate Disposal Yard.

Site Investigation History (4):

- In 1982 and 1983, a Phase I IRP study was performed at Fort Lewis.

- From 1983 to 1985, groundwater investigations were conducted at the American Lake Gardens site (located adjacent to the Logistics Center).

- From 1984 to 1986, The Logistics Center groundwater was investigated.

- In 1985 and 1986, groundwater was investigated in the town of Tillicum and at Camp Murray, both of which are located near the Logistics Center.

- In spring of 1986, additional groundwater sampling was performed at the Logistics Center.

- In 1988, a Remedial Investigation (RI) was completed for the Logistics Center. The RI included the following activities:

    - Collection of 249 soil gas samples
    - Completion of 26 soil borings
    - Installation of 33 groundwater monitoring wells
    - Sampling of 60 previously installed groundwater monitoring wells
    - Collection of 49 surface water samples
    - Collection of 10 sediment samples

- In 1990, a Feasibility Study (FS) was completed for the Logistics Center.

Fort Lewis was placed on the National Priorities List in 1989. In 1990, The U.S. Army, USEPA Region X and the Washington Department of Ecology (WDOE) entered into Federal Facilities Interagency Agreement for addressing Comprehensive Environmental Response, Compensation and Recovery Act (CERCLA) and Resource Conservation and Recovery Act (RCRA) regulated sites at Fort Lewis. Also in 1990, a Record of Decision (ROD) was signed by the U.S. Army, WDOE and USEPA. The ROD specified extraction and treatment of contaminated groundwater at the Logistics Center OU.

- In 1992, during Phase I of the remedial construction, additional monitoring wells were installed, extraction wells were installed and all new wells were sampled to better characterize the TCE plume at the site.

- In 1992 and 1993, a lower aquifer study was conducted at Fort Lewis.

- In 1993, a limited field investigation was performed at the East Gate Disposal Yard (EDGY) source area.

- In 1998, an expanded site investigation was initiated at the EDGY. This investigation is ongoing (as of 7/99).

SITE LOGISTICS/CONTACTS

USACE, Seattle District
Bill Goss, Project Manager
4735 Marginal Way, South
Seattle, Washington 98314
(206) 764-3267

EPA Region X
Bob Kievit
Washington Operations Office
300 Desmond Drive, Suite 102
Lacey, Washington 98503
(360) 753-9014

WDOE
Not Applicable

URS Greiner Woodward-Clyde
LTM - Kelly Teague - (206) 674-7931
Operation and Maintenance - Steffran Neff - (206) 343-7933
2401 Fourth Avenue, Suite 1000
Seattle, Washington 98121

Fort Lewis Public Works
Mr. Dennis Korycinski
Department of the Army. AFZH-DEQ
Fort Lewis, Washington 98433-5000

MATRIX AND CONTAMINANT DESCRIPTION

MATRIX IDENTIFICATION

Groundwater (ex situ)

SITE GEOLOGY/STRATIGRAPHY (4)

The geology beneath the Logistics Center consists of a complex sequence of Pleistocene-age glacial and non-glacial sediments that are present to a depth of at approximately 2,000 feet. Overlying the Pleistocene-age sediments are recent deposits of alluvium, colluvium, and artificial fill consisting of sands, silts, gravels, and organic matter that are generally located in the vicinity of surface drainages and man-made structures. Typically, these layers are less than 10 feet thick and are discontinuous across the site. Tertiary-age bedrock is present beneath the Pleistocene-age sediments at a depth of at least 2,000 feet. The upper 300 feet of the Pleistocene-age sediments were investigated during remedial investigation performed at the site. The four uppermost geologic units of the Pleistocene-age sediments beneath the Logistics Center include from youngest to oldest: 1) the Vashon Drift; 2) the Kitsap Formation; 3) the Salmon Springs Drift; and 4) the Puyallup Formation.

The Vashon Drift geologic unit is subdivided into member units consisting of glacial outwash and till as well as non-glacial deposits. The glacial outwash members are laterally continuous across the site and consist of numerous permeable layers of sand, gravel, and silty sand with a total thickness ranging from

100 to 130 feet. The glacial till layers range from 20 to 35 feet thick and consist of very dense to hard mixtures of gravel and sand in a clay and silt matrix. The non-glacial deposits range from 10 to 40 feet thick and consist of very dense, fine to coarse-grained sandy alluvium and mudflows. The till and non-glacial members of the Vashon Drift are less permeable than the outwash deposits and are found in discontinuous layers beneath the site. Groundwater is first encountered in the Vashon Drift outwash members under unconfined conditions at a depth of approximately 20 feet. Unconfined groundwater in the Vashon Drift outwash moves to the northwest, towards American Lake, under an average gradient of 10 feet per mile. In the Vashon Drift outwash, typical values for transmissivity range from 50,000 to 100,000 gallons per day per foot (gpd/ft), and a median seepage velocity is 1.5 feet per day.

The Kitsap Formation consists of non-glacial alluvium and lacustrine deposits of silt, sand, and clay with isolated layers of gravel, volcanic ash, and peat. This formation is laterally continuous beneath the site, ranges in thickness from 50 to 60 feet, and has relatively low permeability. The Kitsap Formation forms a regional aquitard that separates the overlying Vashon Drift aquifer from the underlying Salmon Springs aquifer. This aquitard is reported to be leaky or discontinuous on a regional scale.

The Salmon Springs Drift geologic unit is subdivided into two member units of glacial outwash and one member unit of glacial till. The glacial outwash deposits, which are not laterally continuous across the site, consist of dense sand and gravel with lenses of silt and clay. Where present, these glacial outwash deposits range from 60 to 140 feet thick. The glacial till member ranges from 5 to 20 feet thick and consists of a dense mixture of gravel and sand in a clay and silt matrix. Groundwater in the Salmon Springs Drift outwash members is present under confined conditions with a potentiometric surface approximately 5 to 50 feet below the water table. Confined groundwater in the Salmon Springs Drift outwash moves to the west-northwest under an average gradient of 20 to 50 feet per mile. In the Salmon Springs Drift outwash, typical values for transmissivity are 9,000 to 21,000 gpd/ft, with a seepage velocity range of 0.1 to 1.0 feet per day. The glacial till member in the Salmon Springs Drift acts as an aquitard within this geologic formation.

The Puyallup Formation consists of non-glacial alluvium and lacustrine deposits of fine-grained sand, gravel, volcanic ash, and mudflows. This formation is laterally continuous beneath the site, is up to 135 feet thick, and has low permeability. The Puyallup Formation forms a regional aquitard that separates the overlying Salmon Springs Drift aquifer from the underlying Stuck Drift aquifer, which serves as part of Tillicum's water supply.

CONTAMINANT CHARACTERIZATION

Volatiles - Halogenated (Chlorinated Solvents) - TCE, DCE

CONTAMINANT PROPERTIES (5,6)

Table M-1 lists selected properties for the two primary contaminants of concern at the Logistics Center OU.

Contaminant	Chemical Formula	Molecular Weight (g/mole)	Specific Gravity (at 20°C)	Boiling Point (°C)	Vapor Pressure (mm Hg at 20°C)	Octanol-Water Partition Coefficient (log K_{ow})
TCE	C_2HCl_3	131.5	1.46	86.7	57.8	2.29
1,2-DCE *	C_2HCl_2	96.95	Cis - 1.26 Trans-1.28	Cis - 60.3 Trans-48	Cis - 1.86 Trans-2.06	Cis - 1.86 Trans-2.06

* It was assumed for this table that the DCE identified at the Logistics Center site is 1,2-DCE.

NATURE AND EXTENT OF CONTAMINATION (2,4)

An RI was performed at the Logistics Center in 1987 and 1988. Investigations performed during the RI indicated subsurface solvent contamination in soil and groundwater in the uppermost portion of the unconfined Vashon Drift aquifer. Soil gas sampling results indicated the presence of TCE, TCA, DCE, PCE, benzene and toluene in the shallow subsurface at the site. TCE and TCA were the most commonly detected compounds. PCE was only detected in one soil gas sample, and is not considered a contaminant of concern for this project. Soil sampling results indicated that TCE was present in the East Gate area at a maximum concentration of 240,000 µg/kg and that DCE was present at a maximum concentration of 282,000 µg/kg. Groundwater sampling results showed that TCE was present in the Vashon Drift aquifer at a maximum concentration of 1,900 µg/L.

Prior to performance of the RI four potential source areas for contamination at the Logistics Center were identified. RI sampling efforts focused on these areas, which are listed below. Figure 2 shows the locations of each of these areas.

- The East Gate Disposal Yard (EDGY): This site is located at the southeastern end of the Logistics Center and was used from 1946 to 1971 (according to aerial photographs) for disposal of wastes from the Mount Rainier Ordnance Depot. Aerial photographs indicate that trenches were excavated and used for disposal of wastes at the site. Wastes reportedly included TCE and petroleum, oils and lubricants from engine degreasing and cleaning activities. These trenches are no longer visible at the site.

- "North Uses Area": This area is located at the northwestern end of the Logistics Center and includes Landfill No. 6, the Industrial Waste Treatment Plant (IWTP) and Buildings 9500, 9570 and 9580. Sludge from the IWTP is treated in an evaporation pond at the site. From 1954 until the mid-1970s sludge and sediment removed from the evaporation pond was disposed in Landfill No. 6.

- Well LC-6 and Pit Area: This area is located in the central portion of the Logistics Center. It was reported that a waste POL disposal pit was operated at this site. Aerial photographs from 1951 confirm the existence of the pit.

- DRMO Yard: This site is located at the southern end of the Logistics Center. This site is currently used for temporary storage of equipment and materials. Historically, drums of wastes including waste TCE were stored at the site.

Results from the RI indicated that the highest levels of solvent contamination were located in the vicinity of the East Gate disposal yard, and that groundwater contamination extended to the northwest in the predominant direction of groundwater flow.

Phase I Investigation Results (8)

As discussed previously, groundwater sampling was performed during Phase I of construction of the remedial action for this project. During Phase I groundwater sampling performed at the Logistics Center OU in 1992, TCE was detected at a maximum concentration of 17,000 µg/L and DCE was detected at a maximum concentration of 1,400 µg/L. Figure 3 shows a TCE plume site map developed from the Phase I groundwater sampling results. It is estimated that the TCE plume is 3,000 to 4,000 feet wide, 60 to 80 feet thick and extends from the East Gate area to American Lake (approximately 2.5 miles). Vinyl chloride was also detected during the Phase I investigation at the EDGY source area.

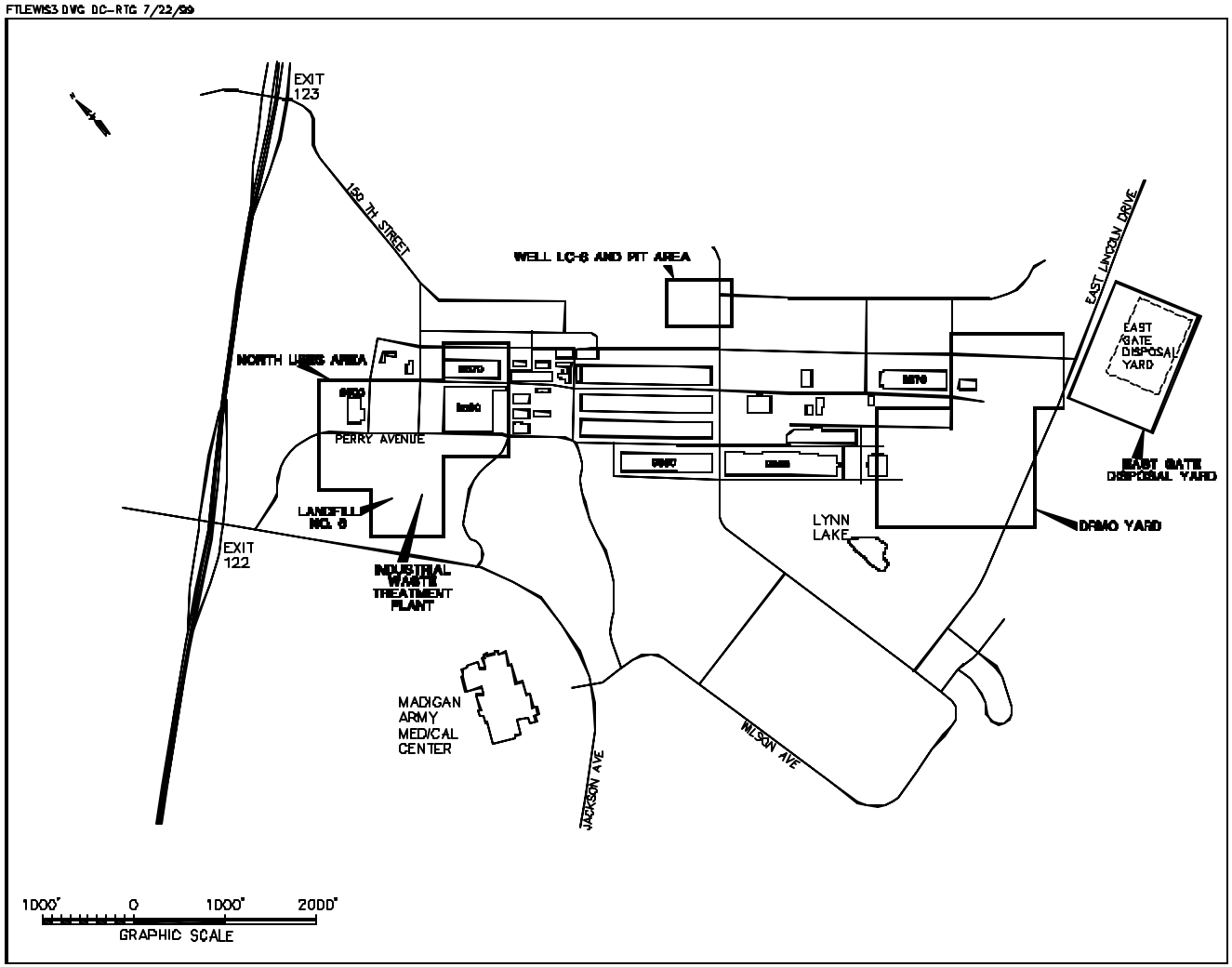

Figure 2. Potential Source Areas at the Logistics Center

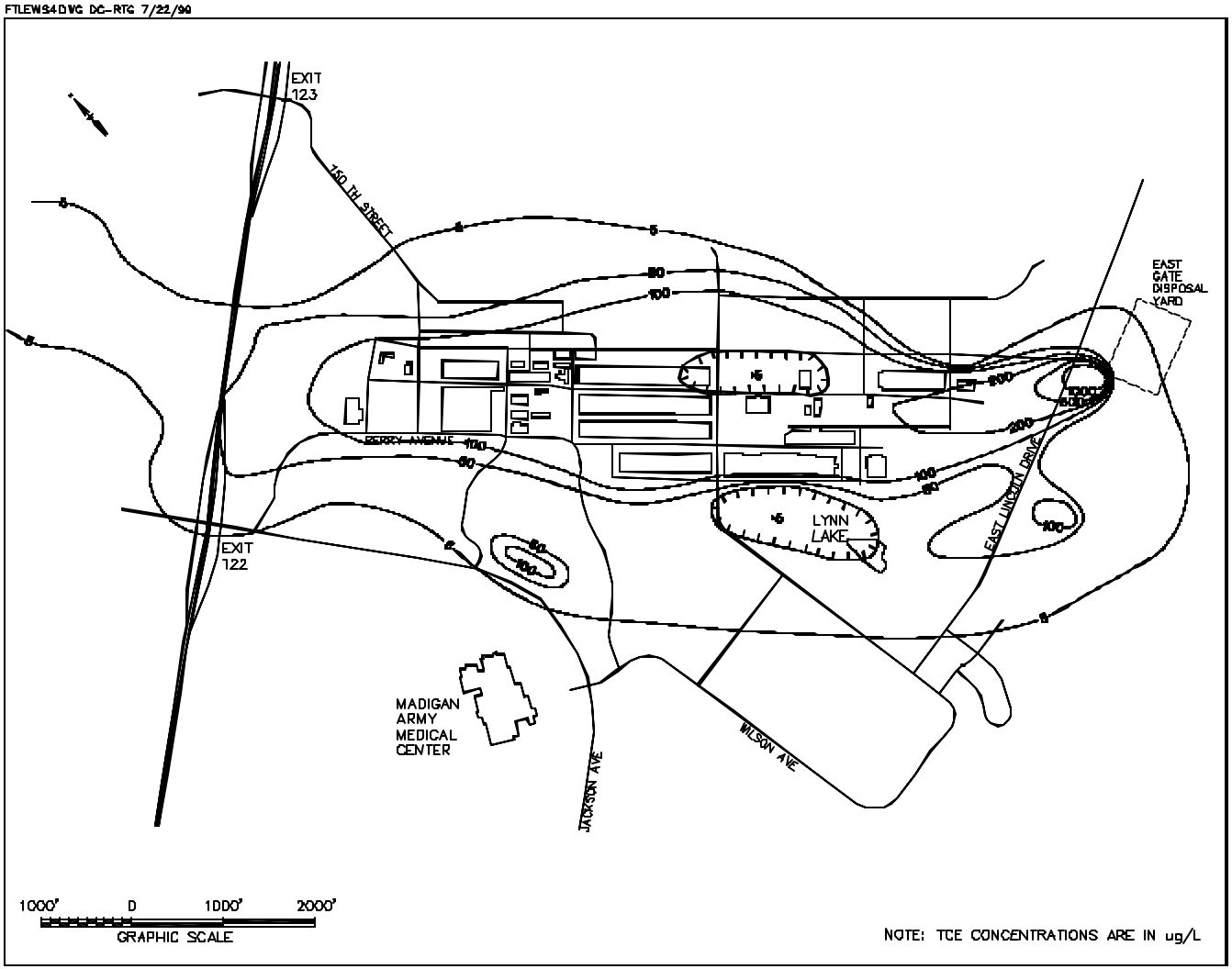

Figure 3. TCE Plume Map for the Logistics Center

Since 1992, TCE has been detected in groundwater at concentrations exceeding 100,000 µg/L and dense non-aqueous phase liquids (DNAPLs) have been detected in the source area at the EDGY.

MATRIX CHARACTERISTICS AFFECTING TREATMENT COST OR PERFORMANCE (7,8,11)

Table M-2 lists selected characteristics for the soil and groundwater at the Logistics Center site.

Parameter	Value
Soil Classification	Soil at the site is extremely heterogenous. No single classification can be used. Shallow site soils consist mostly of sand and gravels with some silt.
Hydraulic Conductivity	Average of 550 ft/day at the I-5 well field Average of 236 ft/day at the East Gate well field
Depth bgs/Thickness of the Zone of Interest	Depth to the contaminated zone is approximately 20 feet bgs, and the zone of interest is approximately 60 to 80 feet thick
Presence NAPLs	DNAPLs and LNAPLs have been observed in the groundwater at the EDGY source area

TREATMENT SYSTEM DESCRIPTION

PRIMARY TREATMENT TECHNOLOGY

Pump and Treat with Air Stripping

SUPPLEMENTARY TREATMENT TECHNOLOGIES

No treatment, other than air stripping, is performed on groundwater extracted at the Logistics Center site.

TIMELINE]

Date	Activity
December 1989	Fort Lewis listed on the NPL
September 25, 1990	ROD signed for Logistics Center OU
March 1992	Phase I design completed
May 1992 - May 1993	Phase I construction and testing (extraction wells, recharge wells, observation wells and monitoring wells)
1992 - 1993	Lower Aquifer Study at Fort Lewis
1993	Limited field investigation at the EDGY source area
May 1993	Phase II design completed
April 1994 - April 1995	Phase II construction (treatment system, piping, infiltration galleries and additional monitoring wells)
August 1995	System start up (Operation by MEI)
October 1996	Woodward-Clyde takes over system operation
August 1995 - August 1997	TYPE conducted for the treatment system
1998-present	Ongoing expanded field investigation at the EDGY source area

TREATMENT SYSTEM SCHEMATIC AND TECHNOLOGY DESCRIPTION AND OPERATION

The groundwater remedy for the Logistics Center OU consists of two distinct groundwater extraction and treatment systems (GTSs). It should be noted that these treatment systems were designed to extract water only from the upper aquifer (Vashon Drift aquifer) at the site. Contamination in the lower aquifer (Salmon Springs Drift aquifer) was detected after the extraction systems were designed and will be addressed under a future project.

The first GTS (The I-5 System) is located at the northwestern edge of the site, and was installed mainly to intercept contamination that may be leaving the site in the predominant direction of groundwater flow. This system consists of 15 extraction wells and 4 infiltration galleries. Extracted groundwater is treated using air stripping and is then delivered to the infiltration galleries. This system is designed to operate at a flow rate of 2,000 gallons per minute (gpm).

The second GTS (The East Gate System) is located at the eastern edge of the site, and was installed to treat the groundwater in the most significant contaminant source area. This system consists of two extraction fields (two and four wells, respectively), two infiltration galleries and two infiltration wells. Extracted groundwater is treated using air stripping and is then delivered to the subsurface via the infiltration galleries and wells.

The East Gate extraction system is divided into primary and secondary extraction well fields. The primary field is located near the estimated source area and was designed to contain and remediate the source area. The primary field was designed to extract a total of 600 gpm. The secondary well field is located 1800 feet down-gradient (northwest) of the primary field and was designed to capture contamination that has already moved away from the source area. The secondary field was designed to extract a total of 230 gpm.

Figure 4 shows schematics for each GTS.

CONSTRUCTION (1, 8)

Construction of the groundwater remedy for the Logistics Center OU was divided into two phases. Each of these phases is discussed below.

Phase I

Phase I included installation of extraction, recharge, monitoring and observation wells. In addition, pumping and infiltration tests were performed in several wells and test trenches. All wells installed during Phase I were sampled and the samples analyzed for volatile organic compounds (VOCs). Phase I was conducted from March 1992 through May 1993. Activities completed during Phase I are listed below.

I-5 GTS

- 15 extraction wells were installed along Tacoma Avenue. The average well depth was 96 feet bgs. Typically, screen was installed in the bottom 30 feet of each well. Design analyses performed prior to construction determined that a cross-gradient line of 15 wells spaced at 175-foot intervals would be adequate to capture contamination at the I-5 well field. The well field was designed to remove a total of 2,000 gpm of groundwater from the site.

- 16 observation wells were installed along Tacoma Avenue.

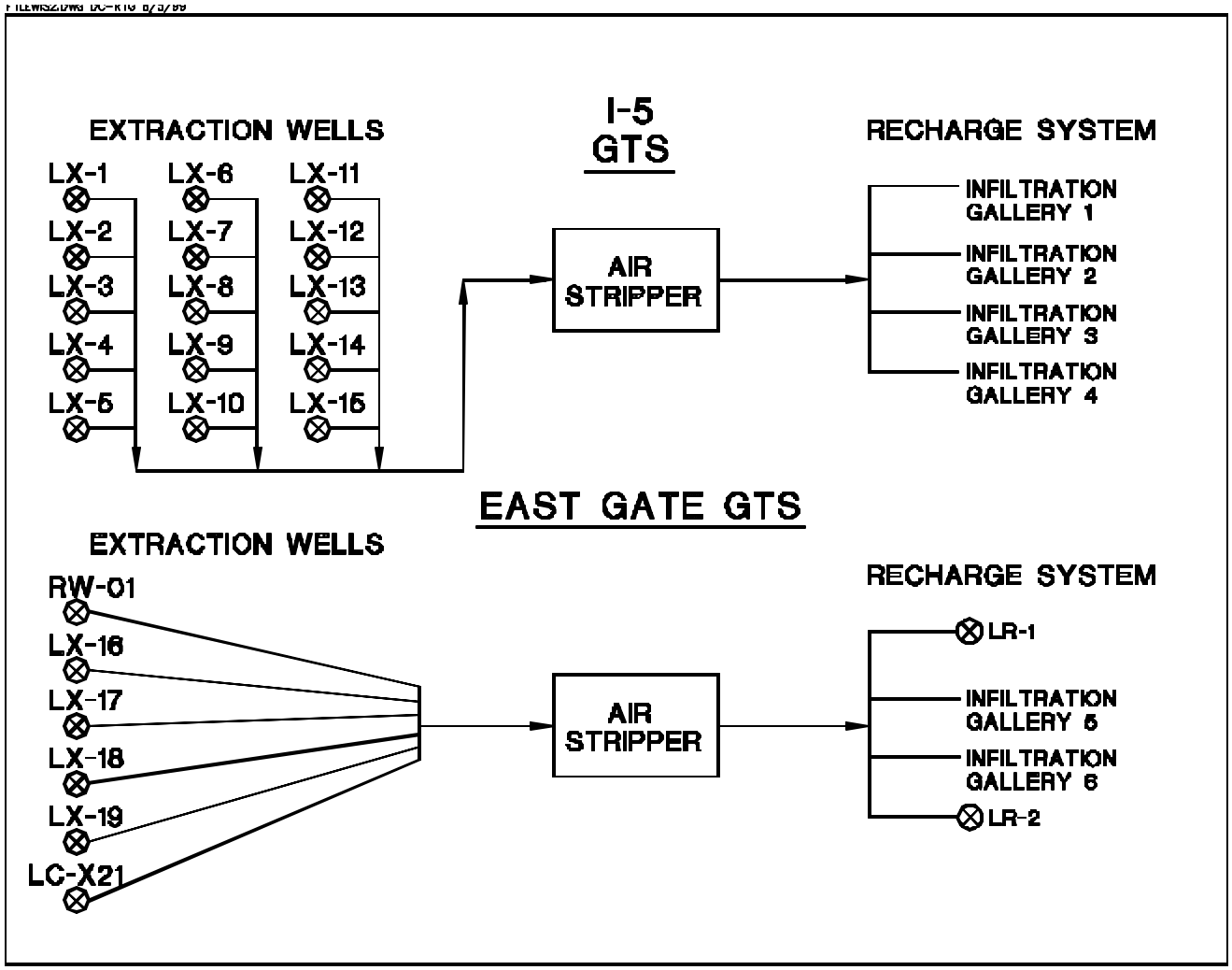

Figure 4. Schematics for the I-5 and East Gate Treatment Systems

- 8 monitoring wells were installed at the site (2 up-gradient and 6 down-gradient of the line of extraction wells along Tacoma Avenue).

- The final recharge design specified four 100-foot long trenches, each capable of receiving 500 gpm of treated groundwater.

East Gate GTS

- 3 extraction and 13 observation wells were installed at the primary well field. One existing well (LX-21) was incorporated into the design of the primary well field.

- 1 extraction and 8 observation wells were installed at the secondary well field. One existing well (RW-01) was incorporated into the design of the secondary well field.

- 2 recharge and 4 observation wells were installed in the recharge field.

- 3 monitoring wells were installed up-gradient of the recharge field.

- Infiltration testing was performed that confirmed that each of the two recharge wells at this site could receive flow rates up to 100 gpm. The final recharge design specified two 100-foot long trenches, each capable of receiving 300 gpm of treated groundwater.

Phase II

Phase II included installation of treatment plants, well pumps, piping, infiltration galleries and additional monitoring wells. Construction was started in April 1994, and the system was started up in August 1995. Activities completed during Phase II are listed below.

- Additional test trenches were excavated at the proposed I-5 and East Gate recharge areas, and tests were performed to determine the likely recharge rates that could be achieved at each site. Based on data gathered during Phase I and II, it was determined that a recharge rate of 2 gpm per square foot of trench could be achieved in the recharge trenches.

- Treatment plants were constructed.

- Piping was installed between the extraction and recharge systems and the treatment plants.

Figures 5 (I-5) and 6 (East Gate) show the extraction and infiltration areas at each GTS as well as the location of the treatment facilities.

OPERATION (12)

The treatment systems were put into operation in August 1995. Along with operation of the treatment plants, the following monitoring is performed on a quarterly basis at the site:

- Monitoring wells at the site (52 wells) are sampled. The samples are analyzed for contaminants of concern (volatile organics), metals (once per year), pH, specific conductance and temperature.

- All of the extraction wells at the site are sampled. The samples are analyzed for contaminants of concern (volatile organics).

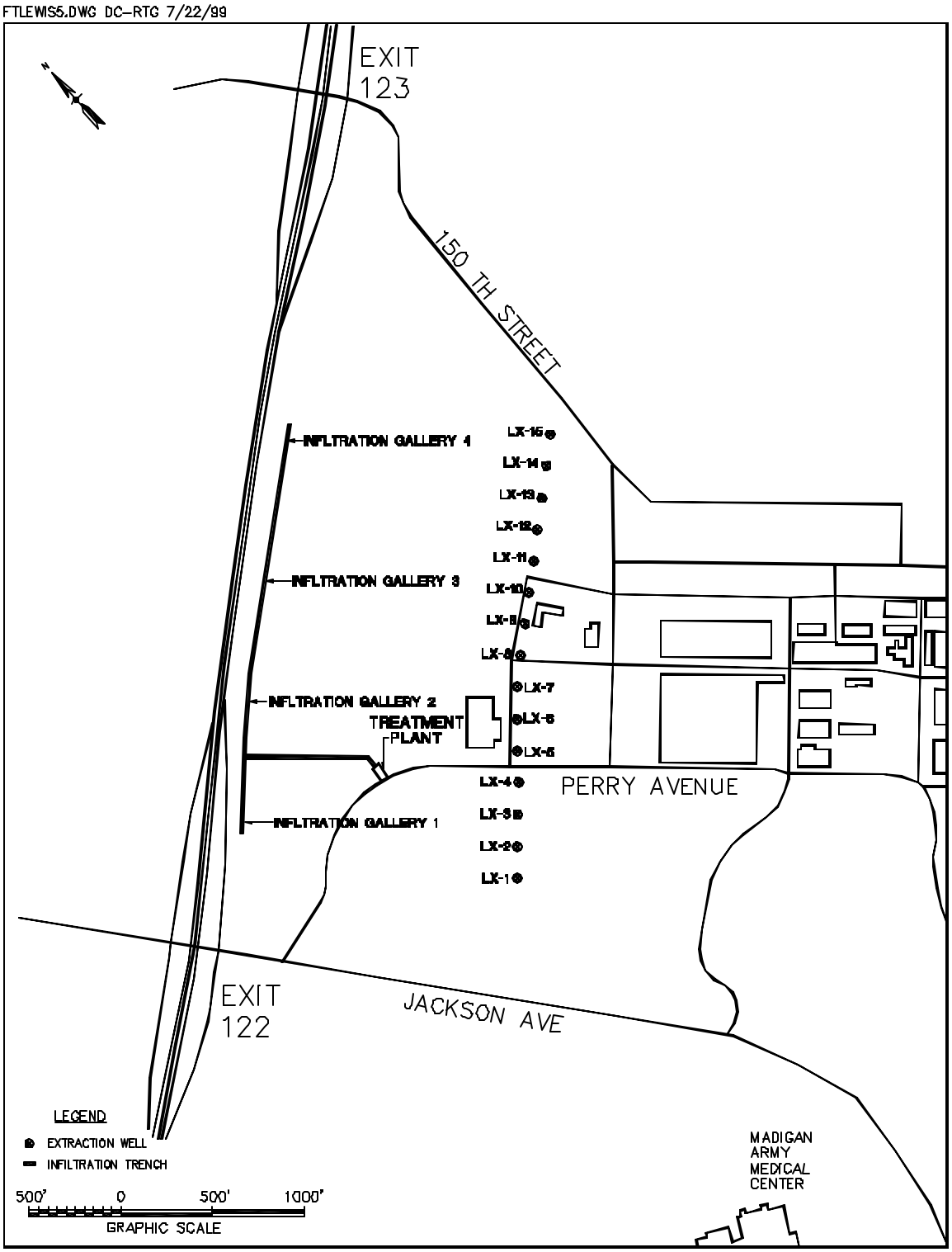

Figure 5. Layout of the I-5 Groundwater Treatment System at the Logistics Center

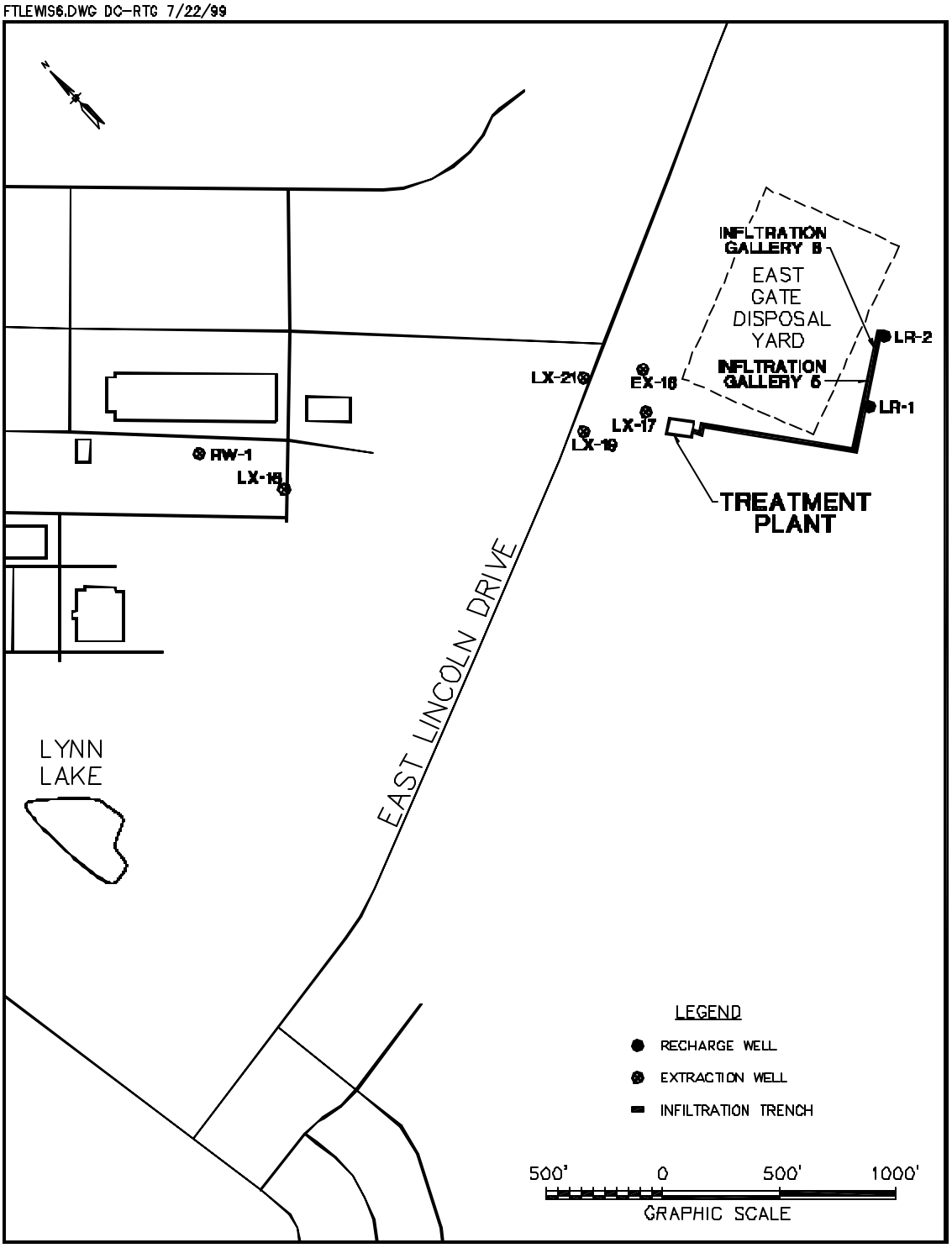

Figure 6. Layout of the East Gate Groundwater Treatment System at the Logistics Center

- Water level measurements are taken in the extraction wells and selected monitoring wells.
- Surface water samples are collected from two locations along Murray Creek.

Calculations regarding treatment system performance are made.

OPERATING PARAMETERS AFFECTING TREATMENT COST OR PERFORMANCE(12)

Parameter	Design Value	Actual Value
pH [1]	Information not Available	5.82 - 12.13
Pumping Rate	2000 gpm - I-5 GTS 800 gpm - East Gate GTS	1630-2084 gpm - I-5 GTS 516-803 gpm - East Gate GTS
Air Flow Rate (Strippers)	Information not Available	Air Flow data not Collected at the Strippers
Operating Pressure/Vacuum	Information not Available	Information not Available
Temperature [1]	Information not Available	7.0 - 15.0 °C

[1] Based on data from samples collected from monitoring wells at the site

TREATMENT SYSTEM PERFORMANCE

PERFORMANCE OBJECTIVES

According to the ROD for the Logistics Center OU, groundwater at the site must to be treated to drinking water standards (MCLs). In addition, WDOE has established substantive requirements for treated groundwater effluent from the treatment systems. MCLs for contaminants of concern are contained in Table TPD-1 below.

Table TPD-1. Summary of Cleanup Levels for Treated Groundwater at the Logistics Center OU

Contaminant	MCL µg/L)
TCE	5
DCE	70
PCE	5
TCA	100
Vinyl Chloride	2

MCL - Maximum Contaminant Level

The ROD specified that the existing plume of contamination be monitored and reduced, and that off-site migration of contaminants be minimized. The ROD also stated that the lower aquifer should be investigated to determine if contamination had migrated from the upper aquifer, and that additional soil sampling be performed at the site to determine if all soil contamination has been removed.

To achieve the goals for the upper aquifer, it was determined that installation of two extraction and treatment systems would be required. The first system (the East Gate GTS) was designed to treat the main contaminant source area, and the second system (the I-5 GTS) was designed to capture contamination before it left the site.

In addition to groundwater treatment and effluent goals, the Puget Sound Air Pollution Control Agency (PSAPCA) has established air emission limits of 75 pounds per month of TCE from the I-5 GTS, and 325 pounds per month of TCE from the East Gate GTS. Table TPD-3 below provides air emissions information for each GTS.

TREATMENT PLAN

Detailed design studies were performed for the extraction and recharge systems at each GTS. Pumping rates, well spacing, and infiltration trench dimensions were all analyzed using field data and computer modeling prior to construction of the systems.

TREATMENT PERFORMANCE DATA (1,12)

Table TPD-2 shows the influent and effluent TCE concentrations for each of the two treatment systems. Table TPD-3 shows TCE air emissions from each system.

Table TPD-2. Treatment Performance Data*

Date	East Gate TCE Concentrations (µg/L)		I-5 TCE Concentrations (µg/L)	
	Influent	Effluent	Influent	Effluent
9/6/95	395	5.1	62	1.6
9/8/95	410	13.0	61	0.8
9/12/95	290	4.9	47	1.4
9/14/95	313.3	5.4	51	1.7
9/20/95	280	4.0	42.5	1.0
9/26/95	400	4.1	50	ND
10/4/95	270	1.3	68	0.5
10/31/95	390	5.2	47	1.2
12/11/95	200	1.2	NA	NA
3/13/96	340	0.8	53	0.4
4/9/96	270	0.7	46	0.8
5/14/96	220	0.7	50	0.8
6/17/96	245	0.8	53	1.2
7/10/96	250	0.3	49	0.9
8/14/96	310	0.5	61	1.0
11/20/96	270	1.4	54	1.6
12/18/96	240	1.6	49	1.4
1/15/97	190	1.6	52	1.4
2/14/97	220	1.1	55	1.7
3/17/97	160	ND (<1.2)	53	1.5
4/23/97	270	0.6	62	1.7
5/12/97	210	ND (<1.2)	47	1.0
6/16/97	200	0.4	44	1.7
7/15/97	170	0.4	47	1.5
8/22/97	220	1.0	45	1.4
9/23/97	210	0.4	42	1.0

* Allowable effluent TCE concentration is 5 µg/L
ND - Not Detected
NA - Result Not Available

Table TPD-3. Air Emissions from Each GTS

Date	TCE Emissions (lbs/month)[1,2]	
	East Gate	I-5
9/6/95	111	42
9/8/95	116	43
9/12/95	83	32
9/14/95	90	35
9/20/95	81	28
9/26/95	116	33
10/4/95	79	46
10/31/95	96	31
12/11/95	42	NA
3/13/96	99	34
4/9/96	77	31
5/14/96	63	34
6/17/96	70	35
7/10/96	59	31
8/14/96	72	36
11/20/96	77	39
12/18/96	68	36
1/15/97	68	36
2/14/97	63	41
3/17/97	30	39
4/23/97	65	46
5/12/97	50	35
6/16/97	47	32
7/15/97	40	34
8/22/97	62	32
9/23/97	57	30

1) Allowable emission rates are 75 lbs/month for the I-5 GTS and 325 lbs/month for the East Gate GTS.

2) TCE emissions are estimated by assuming that all TCE removed by the treatment system is volatilized in the air strippers and subsequently discharged to the atmosphere.

NA - Result Not Available

It should be noted that the I-5 GTS was not in operation during the 12/11/95 sampling event. Therefore, no samples were collected for this event. As indicated by Table TPD-2, in 1995 there were several exceedances of the allowable effluent TCE concentration for the East Gate GTS. In early 1996, the air stripping tower for the I-5 system was modified and has since provided sufficient treatment to meet effluent TCE requirements. The East Gate GTS has consistently met effluent discharge requirements for TCE and neither of the systems has exceeded allowable air emission rates.

Material Balance and Removal Efficiencies (12):

Material balance calculations cannot be made for this project. The initial mass of contaminants at the site is not known. Data presented in the Second Year Remedial Action Monitoring Report (May 1998) indicates that TCE concentrations in the groundwater have not been substantially reduced by this application (after approximately three years of operation). The application has been successful, however, in preventing additional lateral migration of contamination at the site. This determination was made by using data from monitoring wells installed for the purpose of observing the TCE plume at the site.

Treatment system performance data indicates that the TCE removal efficiency for the I-5 GTS has ranged from 96.6 percent to greater than 99 percent, and that the TCE removal efficiency for the East Gate GTS has ranged from 96.8 percent to greater than 99 percent.

PERFORMANCE DATA QUALITY

The O&M for this project is being performed under a Field Sampling Plan (FSP) and a Quality Assurance Project Plan (QAPP). Quality assurance samples are collected at a frequency of 10 percent. Data review is performed by Woodward Clyde and is summarized in data review memos. The USACE also prepares Chemical Data Quality Assurance Reports (CDQARs) for this project according to USACE Quality Assurance (QA) standards.

TREATMENT SYSTEM COST

PROCUREMENT PROCESS

Design and construction of the extraction and treatment systems was competitively bid in two phases. The first phase (installation of most of the extraction wells) was won by Jensen Drilling Company of Eugene, Oregon. The second phase (construction and start up of the treatment systems) was won by MEI of Vienna, Virginia. Each of the contracts was set up for lump sum payment, with fixed unit prices for additional out of scope activities.

TREATMENT SYSTEM COST (1,9,13)

Prior to construction of the two extraction and treatment systems, the USACE developed a cost estimate for Phase II of construction. This estimate was developed using MCASES Gold. The estimated cost for Phase II was $1,615,959. Contingency (10% or $161,586) and SIOH (6% or $106,653) were added to the estimated to yield a total estimate of $1,884,208. No cost estimates for Phase I were available for this report.

Table C-1 lists actual costs incurred for this project during construction and during the first year of O&M.

Table C-1. Summary of Groundwater Treatment Costs for the Logistics Center OU

Work Element	Cost
Phase I	
Design	$891,235.00
Construction	$1,474,531.00
Engineering During Construction	$185,081.97
Supervisory and Administrative Work	$88,471.86
Total Cost	$2,639,319.83
Phase II	
Design	$359,699.52
Construction	$2,053,373.00
Engineering During Construction	$32,874.38
Supervisory and Administrative Work	$122,722.20
Total Cost	$2,568,669.10
Total Project Cost	**$5,207,988.93**

REGULATORY/INSTITUTIONAL ISSUES

Ongoing groundwater treatment at the Logistics Center is conducted under a federal facilities agreement (FFA) among EPA, the U.S. Army, Ft. Lewis, and the WDOE. EPA is the lead agency for the FFA. The ROD for this application was signed in September 1990 and describes requirements for groundwater extraction and treatment over a 30-year period. In September 1998, an Explanation of Significant Difference (ESD) for the ROD was signed for this site.

OBSERVATIONS AND LESSONS LEARNED

COST OBSERVATIONS AND LESSONS LEARNED

The two extraction and treatment systems may be modified in the future to include remote telemetry. Use of remote telemetry would decrease the labor required to maintain the equipment and systems at the site. Instead of maintaining someone at the site on a constant basis or making frequent, regular maintenance trips to the site, it would be necessary to mobilize personnel to the site only as problems occur. In addition, dedicated pumps are being systematically installed in the monitoring wells. This will reduce the time necessary to perform required monitoring at each well.

If these issues had been addressed during design, the associated cost savings could have been realized earlier and the additional equipment and construction costs could have been avoided.

PERFORMANCE OBSERVATIONS AND LESSONS LEARNED

While the air stripper at the East Gate GTS has operated properly since start up, the I-5 GTS air stripper has experienced problems on several occasions and is not currently operating at an optimal level of performance. It should be noted that this stripper is still achieving all specified treatment standards, however, it has been recommended that the performance of the unit be analyzed more closely to determine if it can be operated at a higher performance level.

Evidence of biofouling has been noted in several of the extraction wells at the site. This problem is not considered serious at this time. However, it should be monitored for decreases in well performance.

It has been recommended that a means for measuring airflow be installed at each stripper. Monitoring of this parameter could allow improvement of removal efficiency and a related reduction in the treatment cost.

It has been recommended that extraction pumps be replaced (as necessary) with high-efficiency, variable-speed pumps that will allow for more flexible operation of the extraction system. This will give the extraction systems a better chance to respond to possible future changes in the size and shape of the contaminant plume.

OTHER OBSERVATIONS AND LESSONS LEARNED

Buried waste, including drums, was unexpectedly encountered during construction of the East Gate infiltration gallery. The infiltration gallery was relocated in area away from the buried waste.

Because the remediation project at the Logistics Center was initiated prior to completion of all investigative tasks at the site, several issues have arisen since start up of the remediation systems that could have been addressed as part of remedial design if the investigation had been completed prior to remedial design.

REFERENCES

1) Remedial Action Report, Groundwater Treatment Project, USACE Seattle District, November 1998.

2) Record of Decision, Department of the Army, Logistics Center, Fort Lewis, Washington, September 7, 1990.

3) Final Feasibility Study Report, Fort Lewis Logistics Center, May 1990.

4) Final Remedial Investigation Report, Fort Lewis Logistics Center, November 1988.

5) Handbook of Environmental Data on Organic Chemicals, Second Edition, Verschueren, 1983.

6) EPA, Office of Ground Water and Drinking Water Webpage (http://www.epa.gov/OGWDW/dwh/)

7) Final Design Analysis, Groundwater Treatment, Logistics Center, Fort Lewis Washington, Phase I Well Field Design, March 1992.

8) Geotechnical Design Analysis, Groundwater Treatment, Logistics Center, Fort Lewis Washington, Phase II, May 1993.

9) Cost Estimate, Groundwater Treatment, Logistics Center, Fort Lewis Washington, Phase II, May 1993.

10) Operation and Maintenance Quarterly Report, June 1, 1998 - August 31 1998, October 1998.

11) Final Design Analysis, Groundwater Treatment, Logistics Center, Fort Lewis Washington, March 1992.

12) Second Year Monitoring Report, Fort Lewis Logistics Center Remediation Monitoring, May 1998.

13) Remedial System Evaluation, Ft. Lewis Logistics Center Ground Water Treatment Facility.

ACKNOWLEDGEMENTS

This report was prepared by Radian International for the U.S. Army Corps of Engineers under USACE Contract No. DACA45-96-D-0016, Delivery Order No. 12.