A PERFORMANCE AND COST EVALUATION OF PURUS PADRE® REGENERATIVE RESIN SYSTEM FOR THE TREATMENT OF HYDROCARBON VAPORS FROM FUEL-CONTAMINATED SOILS

APRIL 1995

Distribution is unlimited; approved for public release

AIR FORCE CENTER FOR ENVIRONMENTAL EXCELLENCE (AFCEE)
TECHNOLOGY TRANSFER DIVISION

A PERFORMANCE AND COST EVALUATION OF PURUS PADRE® REGENERATIVE RESIN FOR TREATMENT OF HYDROCARBON VAPORS FROM FUEL-CONTAMINATED SOILS

by

Douglas C. Downey, Christopher J. Pluhar, and Steven R. Archabal

PARSONS ENGINEERING SCIENCE, INC.

DENVER, COLORADO

For

U.S. AIR FORCE

CENTER FOR ENVIRONMENTAL EXCELLENCE

BROOKS AIR FORCE BASE, TEXAS

This document was prepared for the United States Government by Parsons Engineering Science, Inc. In no event shall either the United States Government or Parsons Engineering-Science, Inc. have any responsibility or liability for any consequences of any use, misuse, inability to use, or reliance upon the information contained herein, nor does either warrant or otherwise represent in any way the accuracy, adequacy, or applicability of the contents hereof.

CONTENTS

Page

SECTION 1 - INTRODUCTION 1-1

SECTION 2 - DESCRIPTION OF TECHNOLOGY 2-1

2.1 Purus Padre® Vapor Treatment Unit 2-1
2.2 Vendor's Statement of System Capabilities and Costs 2-4
2.2.1 Capabilities 2-4
2.2.2 System Support and Specifications 2-4
2.2.3 Vendor Costs 2-6
2.3 Regulatory Acceptance 2-8

SECTION 3 - FIELD DEMONSTRATION RESULTS 3-1

3.1 Site Background 3-1
3.2 Regulatory Approval and Requirements 3-2
3.3 Test Conditions 3-2
3.3.1 Soil Vapor Concentrations 3-2
3.3.2 Purus PADRE® Configuration 3-4
3.4 Observed Performance 3-4
3.4.1 Treatment Efficiency 3-4
3.4.2 Cost of Operation 3-6
3.4.3 Comparison of Purus PADRE® Costs to Other Vapor Treatment Technologies 3-7
3.4.4 Reliability and Maintainability 3-11

SECTION 4 - SUMMARY 4-1

4.1 Technology Performance 4-1
4.2 Integration with *In Situ* Bioventing 4-1

SECTION 5 - REFERENCES 5-1

CONTENTS (Continued)

TABLES

No.	Title	Page
2.1	Purus PADRE® Installations as of September 1994	2-5
2.2	Purus PADRE® Model 1.6 Vendor Cost Estimate	2-6
3.1	Vapor Extraction Well Soil Gas Analyses	3-4
3.2	Purus PADRE® System Treatment Performance-Hydrocarbon Removal Efficiency	3-5
3.3	Costs of Purus PADRE® Treatment	3-6
3.4	Cost Comparison of VR Systems Model V2C, Purus PADRE® Model 1.6, and Granular Activated Carbon	3-9

FIGURES

No.	Title	Page
2.1	Purus System Configuration	2-2
2.2	Purus PADRE® Model 1.6 Air Treatment System	2-3
2.3	Adsorption Isotherms for Aromatic Compounds on Pursorb 200 @ 30°C, 100% RH	2-7
3.1	Phase One Flow Diagram, BX Service Station Bioventing	3-3
3.2	Cost versus Influent Concentration at 50 SCFM, Purus PADRE® Model 1.6	3-8
3.3	Cost Comparison of VR Systems V2C, Purus PADRE® Model 1.6, and GAC @ 50 SCFM	3-10
4.1	Optimum Influent Concentrations versus Flow Rate Purus PADRE® Model 1.6	4-3

SECTION 1

INTRODUCTION

This document describes the performance and costs associated with the Purus PADRE® vapor treatment system manufactured by the Purus Corporation of San Jose, California (Purus Inc. 2713 N First Street, San Jose, CA 95134-2000). During the period of 11 February to 1 June 1994, a Purus PADRE® Model 1.6 was tested at the Vandenberg Air Force Base (AFB) Base Exchange (BX) service station near Lompoc, California. In many states, VOCs must be treated before being discharged into the atmosphere. In the Santa Barbara Air Pollution Control District, discharges of both total VOCs and benzene are regulated. The Purus PADRE® system was selected to provide treatment of these compounds until vapor concentrations were reduced to acceptable levels. The test was completed in conjunction with an ongoing bioventing pilot test conducted by Parsons Engineering Science, Inc. (Parsons ES) under the direction of the Air Force Center For Environmental Excellence (AFCEE), Technology Transfer Division (ERT). The purpose of this test was to independently measure both the performance and the cost of Purus PADRE® operation, and to determine how this technology can be most effectively used to complement the bioventing technology.

Bioventing is an *in situ* remediation technology which is best suited for less volatile hydrocarbons commonly found in jet fuels, diesel fuels, and heating oils. Bioventing can be accomplished through air injection or extraction; however, injection of air into sites contaminated with more volatile hydrocarbon products (e.g., gasoline) can result in uncontrolled migration of high concentrations of volatile organic compounds (VOCs). To overcome this disadvantage, soil vapor extraction techniques can be used during the initial months of remediation to remove and treat high levels of soil gas VOCs. Additionally, while the VOCs are being extracted from the soil, the influx of fresh soil gas contains oxygen required to promote *in situ* biodegradation. This short period of vapor extraction is then followed by long-term air injection to provide oxygen for biodegradation of less volatile or adsorbed hydrocarbons in the soil.

Evaluation of the Purus PADRE® vapor treatment system took place during phase one of a full-scale bioventing demonstration. Phase one of the project focused on removing the soil gas containing high levels of volatile hydrocarbons and dewatering to increase the amount of soil that could be contacted by the bioventing process. Extracted soil gas was passed through a Purus PADRE® Model 1.6 vapor treatment system where the high concentrations of volatile hydrocarbons were removed and recovered. The treated soil gas from the Purus unit was recirculated through the soil using air reinjection trenches located along the perimeter of the gasoline spill site. The Purus unit was operated so that

no more than 1,000 parts per million, volume per volume (ppmv) total hydrocarbons were returned to the soil. The total duration of phase one was approximately 110 days. When extracted soil gas VOC concentrations decreased to below 1,000 ppmv, the Purus PADRE® was removed from the site, and phase two bioventing operations (*in situ* biodegradation of the remaining fuel) began.

This document is organized into five sections including this introduction. Section 2 provides a more complete description of the technology, and the vendor's information on performance and cost. Section 3 contains results of the 3-month field test, with an emphasis on VOC destruction efficiency, operating costs, and reliability and maintainability issues. Section 4 provides a summary of this technology evaluation and discusses how this technology can best be integrated into an *in situ* bioventing project. Section 5 includes the references cited in this report.

SECTION 2

DESCRIPTION OF TECHNOLOGY

2.1 PURUS PADRE® VAPOR TREATMENT UNIT

The Purus PADRE® system (Figure 2.1), manufactured by Purus, Inc. of San Jose, California, is an innovative pollution control device designed for onsite capture and recovery of organic vapor emissions from industrial air vents, industrial water treatment processes, and site remediation operations. The Purus system purifies contaminated air streams directly from a soil vapor extraction well by adsorbing the contaminant onto a filter bed filled with a synthetic polymeric adsorbent (Blystone, 1992).

The process involves one bed, or a series of online beds, treating influent air, while another bed is being desorbed. The beds are automatically switched between adsorption and desorption cycles by an onboard controller system. The desorption cycle combines temperature, pressure, and a carrier gas. During the desorption cycle, all the organic contaminants trapped on the adsorbent material are removed, condensed, and transferred as a liquid to a storage tank. The recovered compounds are often acceptable for recycling or reuse options. The system is self-contained and skid-mounted.

The Purus PADRE® process has demonstrated the ability to automatically and repeatedly regenerate adsorption beds with no practical loss of adsorption capacity. The adsorption beds also have a high tolerance to water vapor, allowing processing of air streams with relative humidity greater than 90 percent with little impact on adsorption efficiency.

As shown in Figure 2.2, the Purus PADRE® Model 1.6 system consists of two identical modular adsorbent beds. The choice of adsorbent material is based upon specific contaminant characteristics. During the desorption cycle, the organic material trapped on the adsorbent material is volatilized, condensed, and transferred as a liquid to a storage tank. The condenser system has two stages; one set at 2°C for water condensation and the other at -45°C to capture solvents with low boiling points. The system is equipped with a modem for remote monitoring and control.

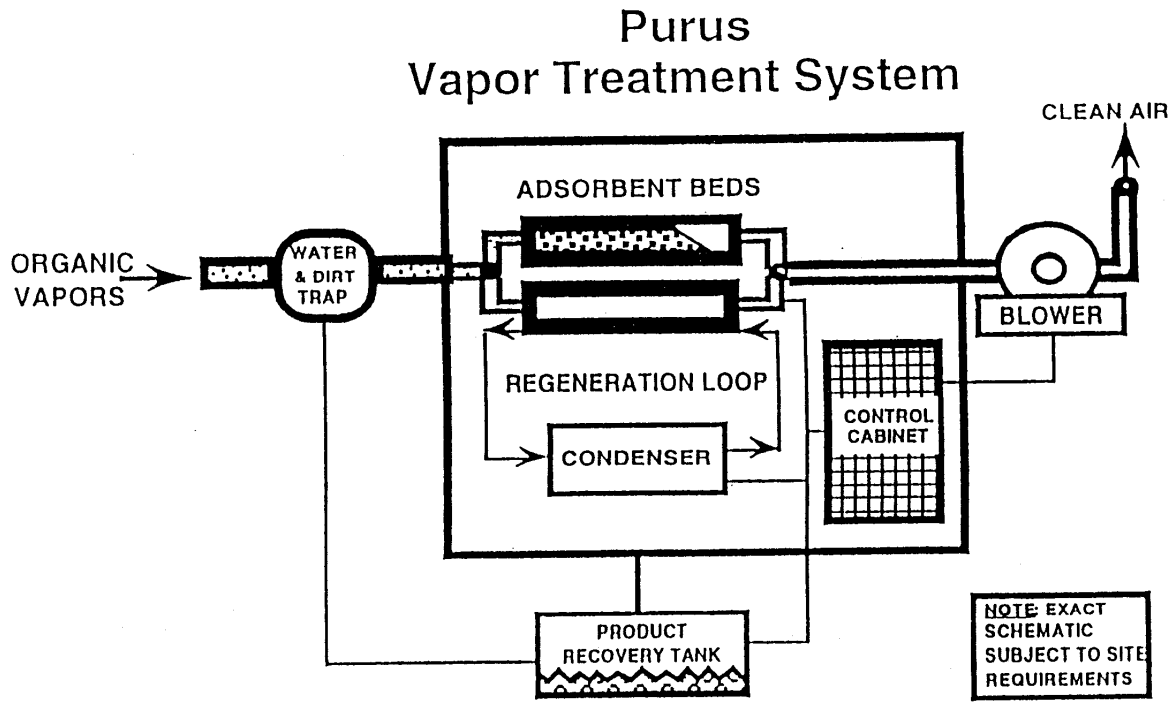

FIGURE 2.1

PURUS
SYSTEM CONFIGURATION

PARSONS
ENGINEERING SCIENCE, INC.
Denver, Colorado

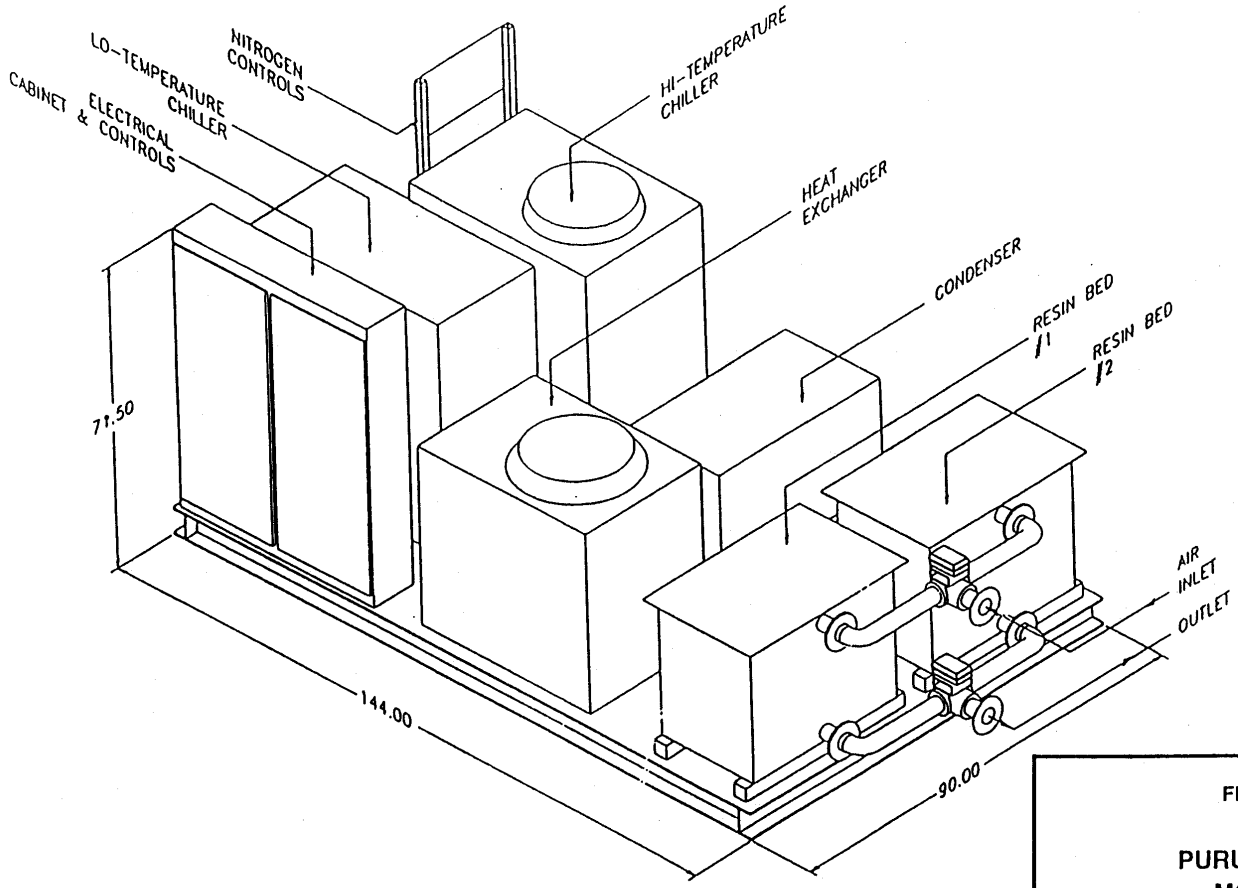

Source: Purus, Inc.

FIGURE 2.2

PURUS PADRE™
MODEL 1.6
AIR TREATMENT SYSTEM

PARSONS ENGINEERING SCIENCE, INC.
Denver, Colorado

2.2 VENDOR'S STATEMENT OF SYSTEM CAPABILITIES AND COSTS

2.2.1 Capabilities

Purus PADRE® systems are available in different configurations, depending on the specific application. To date, Purus has installed systems that can treat air flows as high as 10,000 standard cubic feet per minute (scfm). Smaller units (Model 1.6) are available to handle the lower air flows encountered at some remediation sites. Successfully treated compounds include gasoline hydrocarbons [including benzene, toluene, ethylbenzene, and xylenes (BTEX)], chlorinated solvents such as trichloroethene (TCE) and carbon tetrachloride, and oxygenated solvents such as ketones and alcohols. Table 2.1 presents locations of Purus PADRE® installations as of September 1994.

Purus treatment systems are designed to control VOC emissions at remediation sites and industrial air and wastewater facilities. Site remediation usually involves vacuum extraction of solvents or fuels from soils and, in many cases, treatment of groundwater. Purus provides treatment units for soil vacuum extraction and groundwater air stripping in which VOC vapors are treated with the Purus regenerative adsorption system. Purus units can also treat VOC-laden waters using an emission-free closed-loop air stripping process.

Using an approach similar to closed-looping, the Purus system has also treated extracted soil gas prior to reinjecting the soil gas into the soil, allowing for removal of high levels of hydrocarbon vapors during the early stages of a bioventing project. Gasoline-contaminated sites are most suitable for the Purus PADRE® to be used with *in situ* bioventing.

2.2.2 System Support and Specifications

The Purus PADRE® Model 1.6 requires electrical power delivered at 440V (+/- 10%), 3-Phase, and 150 amp service. Smaller Purus PADRE® models require 220V (+/- 10%), 3-Phase, 4 wire, 75 amp service per module.

Nitrogen gas is required to assist bed desorption. The three supply options are: (1) liquid nitrogen dewar supplied by local vendors, (2) optional nitrogen generator available from Purus, or (3) industrial house nitrogen if available. Nitrogen specifications are 5 scfm dry, 98% pure, oil-free, and particulate-free down to 0.1 micron.

The footprint requirement for a Purus PADRE® Model 1.6 is 7 feet wide, 11 feet long, and 7.5 feet high. Dimensions do not include external equipment such as blowers, site piping, and exhaust stack.

The ambient temperature range for normal operation of the Purus PADRE® system is between 32°F and 100°F (0°C-40°C). The system can be delivered in an enclosure for extreme temperature conditions. Source air-stream temperatures above 150°F might require cooling prior to adsorption. The adsorption process will work over a range of

TABLE 2.1

PADRE® INSTALLATIONS AS OF SEPTEMBER 1994

	Customer	St.	VOC Source	Contaminants	Date	cfm
1	Chemical Plant	PA	Odor Control	Acetone, Hexane, Acrylates	11/11/92	1,000
2	Acetate Film Manufacturer (x)	NY	Plant Decommissioning	Methylene Chloride, Acetone, MeOH	6/11/93	500
3	Air Force Base (x)	OK	Paint stripping line	MEK	7/2/93	500
4	Composites Manufacturer (x)	OH	Plant Ventilation	Styrene	5/23/94	150
5	Petroleum Refinery (x)	TX	Tank Cleaning	Benzene	6/3/94	500
6	Food Additives Co. (4 units)	OK	Process Air Stream	Isopropyl Alcohol (IPA)	6/20/94	4,000
7	Chemical Manufacturer	NJ	Process Air Stream	Acrylates / IPA	6/28/94	1,000
8	Food Additives Co.	OK	Process Air Stream	Isopropyl Alcohol (IPA)	9/24/94	4,000
9	Petrochemical Plant	TX	Process Air Stream	Benzene	8/8/94	500
10	Automotive Parts Manufacturer	GA	Process Air Stream	MEK	9/27/94	1,500
11	Chemical Plant (2 units)	IL	Process Wastewater	Vinyl Chloride	8/20/94	300
12	Chemical Plant (x)	TX	Process Wastewater	Benzene, Styrene, Ethyl Benzene	6/2/93	150
13	Chemical Plant	TX	Process Wastewater	Toluene, Acetone, Methylene Chloride	5/12/92	100
14	TSD Facility	CA	Process Water Tanks	Industrial Solvents, hydrocarbons	8/15/94	500
15	Power Utility Company	AZ	Groundwater	Chlorinated Solvents	12/22/93	5,400
16	Municipality (x)	CA	Groundwater	Chlorinated Solvents	5/21/93	1,000
17	Defense Contractor	CA	Groundwater	Chlorinated Solvents	9/21/93	1,000
18	Air Force Base	CA	Groundwater	Chlorinated Solvents	3/25/94	600
19	Chemicals Distributor	CA	Groundwater	Chlorinated Solvents	11/12/93	150
20	Chemical Plant	CA	Groundwater	Chlorinated Solvents, Mineral Spirits	6/30/94	500
21	DOE Facility	CA	Groundwater	Chromium Removal	3/31/94	80 gpm
22	Office of the State	IA	Groundwater	Gasoline	1/15/93	150
23	Superfund Site	IN	Groundwater	Gasoline	9/19/94	1,500
24	Chemical Manufacturer	KS	Groundwater	Chloroform	3/31/94	450
25	Chemical Plant (x)	LA	Groundwater	Chlorinated Solvents	12/3/93	150
26	Chemical Plant	LA	Groundwater	Chlorinated Solvents	8/8/94	1,000
27	Electronics Plant (2 units) (x)	NE	Groundwater	Chlorinated Solvents	12/22/92	400
28	Solvent Recycling Facility (x)	NJ	Groundwater	Methylene Chloride	4/30/93	150
29	Superfund Site	FI	Groundwater	TCE	9/19/94	150
30	Superfund Site (2 units)	TX	Groundwater	Chlorinated Solvents	9/27/94	1,000
31	TSD Facility	MI	Groundwater	Chlorinated Solvents	9/28/94	500
32	Electronics Manufacturer	CA	Groundwater/SVE	Chlorinated Solvents	3/31/94	1,000
33	Chemicals Distributor (x)	CA	Groundwater/SVE	Chlorinated Solvents	2/9/93	160
34	Air Force Base (x)	CA	Soil Bioventing	Gasoline	9/30/93	50
35	TSD Facility	NV	Soil Bioventing	Gasoline	6/30/94	500
36	Chemical Plant (2 units)	NJ	Soil Thermal Desorption	Chlorobenzene	5/27/94	4,500
37	Car Dealership	CA	Soil Vapor Extraction	Gasoline	3/31/92	22
38	Paint Manufacturer (x)	AZ	Soil Vapor Extraction	Mineral Spirits	10/27/92	250
39	Solvent Recycling Facility	CA	Soil Vapor Extraction	Industrial Solvents	3/4/93	150
40	Manufacturing Plant (x)		Soil Vapor Extraction	Chlorinated Solvents, Freon-113	3/10/93	100
41	Chemical Plant (x)	CA	Soil Vapor Extraction	Chlorinated Solvents, Mineral Spirits	4/2/93	150
42	Army Depot (x)	CA	Soil Vapor Extraction	Chlorinated Solvents, Freon-113	7/2/93	150
43	Aircraft Manufacturer (x)	CA	Soil Vapor Extraction	Methylene Chloride	8/10/93	150
44	Defense Contractor (x)	CA	Soil Vapor Extraction	Chlorinated Solvents, MEK	8/26/93	150
45	Air Force Base (2 units) (x)	CA	Soil Vapor Extraction	Chlorinated Solvents	8/30/93	1,000
46	Defense Contractor	CA	Soil Vapor Extraction	Chlorinated Solvents	10/29/93	500
47	Chemical Plant	LA	Soil Vapor Extraction	Chlorinated Solvents	12/30/93	1,000
48	Chemicals Distributor	CA	Soil Vapor Extraction	Chlorinated Solvents	12/31/93	500
49	Electronics Plant (x)	CA	Soil Vapor Extraction	Chlorinated Solvents	1/18/94	500
50	Defense Contractor (x)	CA	Soil Vapor Extraction	Chlorinated Solvents	3/18/94	150
51	Army Depot	CA	Soil Vapor Extraction	Chlorinated Solvents, Freon-113	3/25/94	500
52	Electronics Manufacturer	CA	Soil Vapor Extraction	Chlorinated Solvents	3/25/94	800
53	Chemical Manufacturer (x)	LA	Soil Vapor Extraction	Vinyl Chloride	3/28/94	75
54	Landfill	NY	Soil Vapor Extraction	Chlorinated Solvents	6/21/94	750
55	Polymer Manufacturer	NJ	Soil Vapor Extraction	Chlorinated Solvents	6/28/94	100
56	Manufacturing Facility	FL	Soil Vapor Extraction	Chlorinated Solvents	6/29/94	2,500
57	Semiconductor Manufacturer	CA	Soil Vapor Extraction	Chlorinated Solvents	6/30/94	400
58	Petrochemical Plant	TN	Soil Vapor Extraction	Chlorinated Solvents	9/27/94	200
59	DOE facility	WA	Soil Vapor Extraction	Carbon Tetrachloride	9/30/94	500

relative humidity conditions. The unit operates at a noise level of < 85 decibels (db) at 10 feet when all components are running simultaneously.

VOC removal efficiencies are generally greater than 98 percent. The Purus PADRE® unit can be configured and operated to obtain even greater efficiencies if required by an operating permit. For the Vandenberg AFB application, each bed contained approximately 180 pounds of adsorbent, and approximately 14 pounds of gasoline were collected from each bed during the desorption step. The Purus PADRE® system exhibited an 8 percent working isotherm capacity. Figure 2.3 illustrates an adsorption isotherm for aromatic compounds on PurSorb 200 in a humid air stream.

2.2.3 Vendor Costs

Table 2.2 shows the vendor's estimate of capital, rental, operating, and estimated maintenance or service contract costs for a Purus PADRE® Model 1.6 operated in a manner similar to the Vandenberg AFB application.

TABLE 2.2

Purus PADRE® MODEL 1.6 VENDOR COST ESTIMATE

Cost Item	Price
Purchase	$132,500
Rental (monthly)	7,000
($3,500 if over 12 months)	
Operating Costs (monthly)	
electrical*	254
nitrogen gas**	487
Estimated Maintenance (monthly)	500

* Excludes site blower and assumes $0.06 per kilowatt hour.

** Assumes $80 per liquid nitrogen dewar costs.

FIGURE 2.3
ADSORPTION ISOTHERMS FOR AROMATIC COMPOUNDS ON PURSORB™ 200 @ 30°C, 100% RH

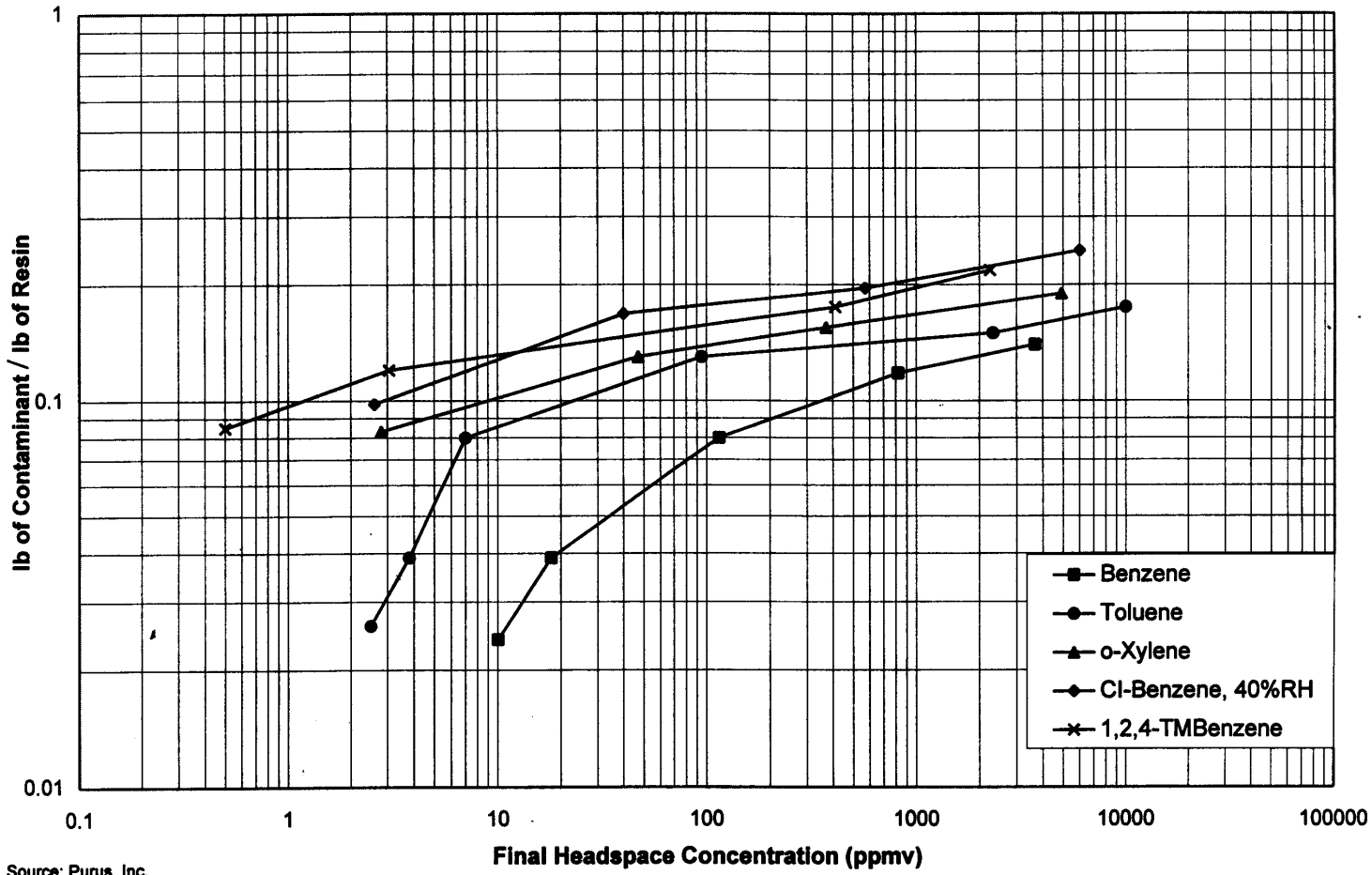

Source: Purus, Inc.

2.3 REGULATORY ACCEPTANCE

Acceptance of Purus PADRE® systems by regulatory agencies has been widespread, including federal EPA, state, and local air quality districts. The following states have permitted Purus PADRE® systems to date:

Arizona	Iowa	Ohio
California*	Kansas	Oklahoma
Florida	Louisiana	Pennsylvania
Georgia	Michigan	Rhode Island
Illinois	Nebraska	South Carolina
Indiana	Nevada	Tennessee
	New Jersey	Texas
	New York	Washington

* Includes permits in the stringent South Coast and Bay Area Air Quality Management Districts, as well as a Multiple Sites Permit from South Coast. Purus also anticipates permits in Germany, Switzerland, and Puerto Rico in 1995.

SECTION 3

FIELD DEMONSTRATION RESULTS

3.1 SITE BACKGROUND

In 1985, two 10,000-gallon unleaded gasoline tanks and associated piping were removed from the Vandenberg AFB BX Service Station. Two additional gasoline storage tanks and a 250-gallon waste oil tank were removed in 1991. During these tank removals, hydrocarbon contamination was discovered beneath the tanks. A small amount of contaminated soil was removed during excavation operations. Subsequent site assessments revealed soil and groundwater contamination beneath much of the site. Total petroleum hydrocarbons, quantified as gasoline (TPH-gasoline), of up to 22,000 milligrams per kilogram (mg/kg) were measured in soil samples collected during these investigations. Up to 210 mg/kg of benzene, 2,000 mg/kg of toluene, 490 mg/kg of ethylbenzene, and 2,900 mg/kg of xylenes was also detected. Groundwater samples also contained these contaminants. The contamination was found to be within a highly permeable silty sand, and extended from approximately 3 to 14 feet below ground surface (bgs). The depth to groundwater varies between 7 and 9 feet bgs and fluctuates seasonally. The lower boundary of this aquifer is composed of an impermeable clay bed located between 14 and 20 feet bgs.

In September 1992, an initial bioventing pilot test was conducted following procedures outlined in the Test Plan and Protocol for a Field Treatability Test for Bioventing (Hinchee et al., 1992). The soil vapor within the contaminated zone at this site had been depleted of oxygen due to fuel biodegradation. Hydrocarbon vapor concentrations of up to 45,000 ppmv of volatile hydrocarbons and 400 ppmv of benzene were measured in soil gas samples. An *in situ* respiration test indicated that when oxygen (air) was provided to the subsurface, soil microbes consumed hydrocarbons at a rate of approximately 1.6 to 2.7 milligrams of hydrocarbon per kilogram of soil per day. Due to the high concentrations of hydrocarbon vapor in the shallow soil and close proximity to occupied buildings, air injection could not be used to supply oxygen to the soils during initial bioventing operations. The risk of vapor migration into nearby buildings and utility corridors must always be considered when evaluating the merits of bioventing using air injection versus soil vapor extraction.

A two-phased bioventing pilot test at the Vandenberg AFB BX Service Station began on February 11, 1994. During phase one, high levels of hydrocarbon vapor were removed using soil vapor extraction. A vacuum-induced influx of oxygen-rich soil gas stimulated *in situ* biodegradation of sorbed fuel residuals. Removed hydrocarbon vapors were treated using the Purus PADRE® unit, and the treated gas was returned to the soil using a perimeter injection trench which acted as an *in situ* biofilter to biodegrade any untreated hydrocarbon vapors. Figure 3.1 illustrates the phase one operation. When the average soil gas concentrations had been reduced to less than 1,000 ppmv, the Purus PADRE® treatment unit was removed and the soil gas was recirculated through the perimeter injection trench for *in situ* biotreatment. The flux of hydrocarbon vapors from the soil to the atmosphere was minimal and was carefully monitored using a soil flux protocol prescribed by the EPA (Radian, 1985). A dewatering system has been established on the site to remove perched water and to increase the volume of contaminated vadose zone soil that can be treated through bioventing. Additional details on the design and performance of the *in situ* biofilter are reported in another publication (Downey, 1994).

3.2 REGULATORY APPROVAL AND REQUIREMENTS

The State of California strictly regulates hydrocarbon emissions to the atmosphere. The Santa Barbara County Air Pollution Control District (SBCAPCD), the Department of Toxic Substances Control, and the Central Coast Regional Water Quality Control Board approval were required for this project; allowable air emissions were set by the SBCAPCD. System operating parameters were mutually agreed upon. It was also agreed that reinjected hydrocarbons would not exceed 1,000 ppmv. Under no circumstances could the system operate if air within the BX Service Station building or over the injection trenches contained more than 1 ppmv of benzene. Flux monitoring samples were never to exceed 100 ppmv hydrocarbons and total site hydrocarbon emissions were never to exceed 1 pound per hour. However, the use of the Purus PADRE® followed by reinjection/*in situ* biofiltration of vapors required no formal air emission permit.

3.3 TEST CONDITIONS

3.3.1 Soil Vapor Concentrations

Table 3.1 shows total hydrocarbon and oxygen concentrations in soil vapor from each extraction well before system startup and after 18 days of treatment. Average soil vapor concentrations of hydrocarbon were reduced by a factor of five during this 18-day period. The influx of oxygen-rich soil gas from uncontaminated soils into the contaminated soils is also evident. This highly aerobic environment ensured that fuel biodegradation would complement volatilization in the removal of gasoline residuals from these soils. The soil vapor extraction rate during phase one was varied between 20 and 49 scfm, and the flow from each vent well was adjusted to produce the desired influent concentration for the Purus PADRE® unit. By the 110th day of operation, the average hydrocarbon concentration of soil vapor had been reduced by a factor of 20.

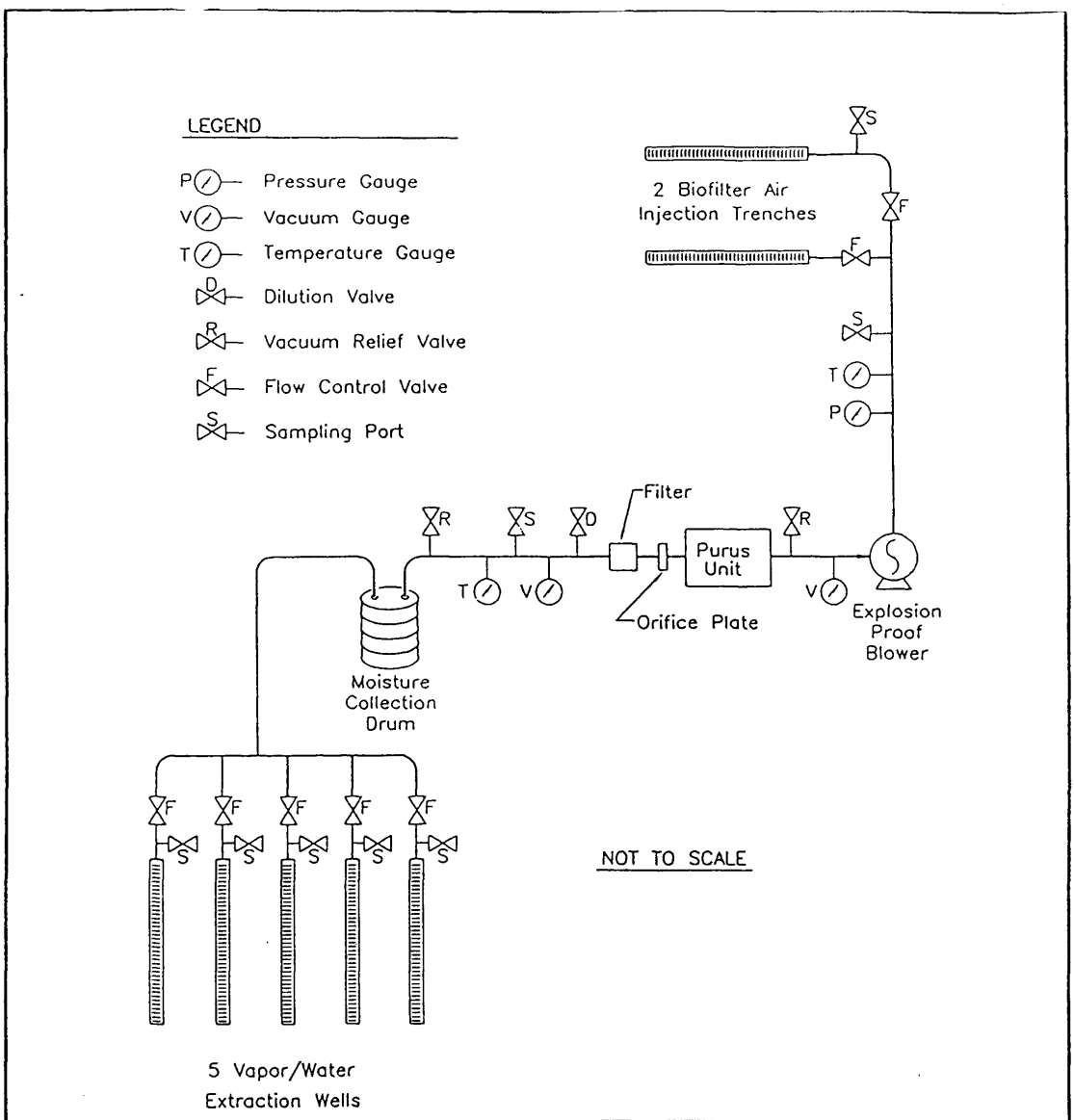

FIGURE 3.1

PHASE ONE FLOW DIAGRAM
BX SERVICE STATION BIOVENTING

Vandenburg AFB, California

PARSONS ENGINEERING SCIENCE, INC.
Denver, Colorado

022/722406/6.WW6

TABLE 3.1

VAPOR EXTRACTION WELL SOIL GAS ANALYSES
BX SERVICE STATION
VANDENBERG AFB

Date	Vapor Extraction Well	Total Hydrocarbons	Percent Oxygen
1/5/94	VEW 1	54,000	1.0
pre startup	VEW 2	9,000	2.0
	VEW 3	5,200	1.5
	VEW 4	8,000	0.0
	VEW 5	94	13.0
3/1/94	VEW 1	9,000	16.0
After 18 days of	VEW 2	3,600	20.2
treatment	VEW 3	700	20.8
	VEW 4	580	20.5
	VEW 5	260	20.8
6/1/94	VEW 1	1,900	19.9
After 110 days of	VEW 2	1,600	18.9
treatment	VEW 3	32	19.0
	VEW 4	56	11.8
	VEW 5	46	19.2

3.3.2 Purus PADRE® Configuration

For this application, each of the two adsorbent beds of the Purus PADRE® Model 1.6 was loaded with 180 pounds of PurSorb® 200. An adsorption isotherm for removal of aromatic hydrocarbons using PurSorb® 200 resin was provided by Purus (Figure 2.3). Each bed was designed to adsorb approximately 14 pounds of hydrocarbons before being cycled to the desorption phase (approximately 8 percent working isotherm capacity). It is important to note that the resin bed size and regeneration cycles can be optimized based on the concentrations and flow rates encountered.

3.4 OBSERVED PERFORMANCE

The performance of the Purus PADRE® was evaluated based on three primary criteria: treatment efficiency, cost, and reliability and maintainability. Results of the independent evaluation follow.

3.4.1 Treatment Efficiency

Influent soil gas and effluent from the Purus PADRE® unit were monitored for total hydrocarbon and benzene removal. Both a portable GasTech Tracetechtor® hydrocarbon analyzer and laboratory analysis using EPA Method TO-3 were used to determine total volatile hydrocarbon and BTEX vapor concentrations. Removal rates averaged greater than 98 percent for total hydrocarbons, and greater than 99 percent for benzene.

Efficiency dropped below 98 percent only once when one bed was accidentally adsorbing for twice the normal time period, which led to hydrocarbon breakthrough. The Purus PADRE® system recovered approximately 570 gallons (1,600 kg) of hydrocarbons and 70 gallons of water from the extracted soil vapor during the 110-day test period. Table 3.2 provides a summary of the Purus PADRE® performance and a comparison of treatment efficiency at flow rates of 20 to 49 scfm and total hydrocarbon concentrations of 18,600 to 3,000 ppmv, respectively.

TABLE 3.2

PURUS PADRE® SYSTEM TREATMENT PERFORMANCE - HYDROCARBON REMOVAL EFFICIENCY BX SERVICE STATION, VANDENBERG AFB

Date	Purus Influent (ppmv)	BioFilter Trench Influent (ppmv)	Flow Rate	Extraction Well Source	Treatment Efficiency (percent)
		Startup 2/11/94			
2/11/94	8,600	110	40 cfm	VEW 3 - 5	98.7
2/12/94	3,600	140	40 cfm	VEW 3 - 5	96.1
2/13/94	5,600	85	40 cfm	VEW 3 - 5	98.5
Benzene**	385	<.1			99.9%
2/14/94	18,600	80	40 cfm	VEW 1 - 5	99.6
2/15/94	6,400	110	40 cfm	VEW 3 - 5	98.3
Benzene	147	<.1			99.9%
2/17/94	5,600	80	20 cfm	VEW 1 - 5	98.6
2/18/94	**13,000**	**64**	20 cfm	VEW 1 - 5	99.5
Benzene	220	<.1			99.9%
3/2/94	**6,000**	**6.8**	20 cfm	VEW 1 - 5	99.9
Benzene	110	<.1			99.9%
3/21/94	**4,000**	**50**	20 cfm	VEW 1 - 5	98.8
Benzene	96	<.1			99.9%
3/30/94	**4,500**	**9.1**	20 cfm	VEW 1 - 5	99.8
4/14/94	**3,000**	***430**	20 cfm	VEW 1, 2, 4	*85.7
Benzene	60	.14			99.8%
4/28/94	**3,700**	**30**	46 cfm	VEW 1, 2	99.2
5/24/94	**4,300**	**71**	49 cfm	VEW 1, 2	98.3
Benzene	35	<.01			99.9%

Values in boldface are EPA Method TO-3 data quantified as gasoline. All other values were measured with a GasTech TraceTechtor\hydrocarbon meter calibrated to ambient air and 4,800 ppmv hexane.
* = Anomalous result - adsorption on a resin bed for twice normal period causing saturation of bed.
** = Benzene removal data for the sampling date above.
VEW 1 - 5 are in order of contamination magnitude, with VEW 1 having highest contamination and VEW 5 the lowest.
Hydrocarbon data were collected at random times during adsorption cycles. Therefore, the effluent concentrations may have varied from the measured values by up to a factor of 2 during each adsorption cycle.

For additional treatment, effluent from the Purus PADRE® was injected into the *in situ* biofilter trenches around the perimeter of the site. Although the Purus PADRE® unit alone

provided adequate treatment to meet SBCAPCD discharge standards, the use of *in situ* biofiltration provides an important backup when the system experiences short-term problems. During phase two operations, the *in situ* biofilter has consistently provided greater than 99 percent treatment of the recirculated hydrocarbon vapors.

3.4.2 Cost of Operation

Parsons Engineering Science, Inc. closely monitored the costs of setup and operation of the Purus PADRE® system. Excluded from these costs are Parsons ES labor costs and the cost of vapor and air emission sampling, which would be relatively constant regardless of the vapor treatment technology.

The cost of transporting the system to the site via surface freight was also excluded as it would vary based on the site location. The Model 1.6 requires a 440 volt, 150 amp, 3-phase power supply. The cost of power connections will vary based on the availability of a high voltage supply on the site. On more remote sites, the cost of supplying power to the Purus PADRE® would be significant. A summary of these costs is provided in Table 3.3.

TABLE 3.3

COSTS OF PURUS® PADRE TREATMENT AT VANDENBERG AFB BX SERVICE STATION

Cost Item	Subtotal
Purus Setup	$2,500
Rental (110 days)	$25,667
Purus Operation Labor (110 days)	$4,500
Power	$1,212
Nitrogen	$1,760
Mobilization/Demobilization (variable)	$1,000
Total Cost	$36,634

The total rental fee for the Vandenberg AFB project was $25,667, and was based on 110 days of operation and a 30-day month. The Model 1.6 has a rental charge of $7,000 per month for this short-term application. However, Purus has indicated that this charge is flexible based on the demand for these units and the time on site. A rental fee of $3,500 per month is available for rentals of 12 months or more.

A total of 20,200 kilowatt hours of electricity were used for Purus PADRE® operations. Assuming a cost of 6 cents per kilowatt hour, the total electric cost was approximately $1,212. Twenty-two dewars of liquid nitrogen were consumed during PADRE® operation. At a cost of approximately $80 per dewar, including delivery, $1,760 was spent on nitrogen. Startup of the Purus system required an engineer on site for two weeks at an approximate cost of $2,500. Operations and maintenance of the system required a daily 2-hour visit by a technician at an approximate cost of $300 per week, or a total cost for the duration of PADRE® operation of $4,500. During long-term

operations, this cost could be significantly reduced if a telephone modem were used to monitor and control the system. A minimum of 3 hours per week ($125) will be required to change out nitrogen and check system operations. Disposal costs for the recovered, condensed hydrocarbons were minimal because the product was recycled.

At the Vandenberg AFB site, the total Purus PADRE® treatment cost was approximately $23 per kilogram ($10.45/lb) of hydrocarbons removed. Cost are site-specific and time-sensitive. For example, if the test site were more contaminated, the Purus PADRE® could have easily removed twice as much fuel over the same 110-day period without decreasing treatment efficiency. Figure 3.2 illustrates the impact of influent concentration on Purus PADRE® costs if a constant flow rate of 50 scfm is assumed. At 50 scfm, optimum and maximum loading will occur at a concentration of approximately 4,250 ppmv. For gasoline vapors, this corresponds to a loading rate of 36 kilograms (79.2 lbs) per day. To maintain this optimum loading rate, the flow rate can be increased as the vapor concentrations decrease. As long as a 36-kilogram-per-day loading is maintained, the treatment cost will be approximately $5 to $6 per kilogram of hydrocarbon removed.

3.4.3 Comparison of Purus PADRE® Costs to Other Vapor Treatment Technologies

Table 3.4 provides a cost comparison of Purus PADRE® Model 1.6, VR Systems Model V2C internal combustion engine (ICE), and granulated activated carbon (GAC). Purus PADRE® costs are based on a reduced rental rate of $3,500/month, which assumes a 12-month minimum rental. Costs for the V2C ICE unit are based on previous Air Force testing of ICEs (Archabal and Downey, 1994) and manufacturer's data. Carbon costs are based on vendor costs as of 1 January 1995. All costs are based on a 50-scfm soil vapor extraction rate, and are calculated for four different hydrocarbon concentrations ranging from 525 ppmv to 4,250 ppmv.

Figure 3.3 illustrates this cost comparison as a function of influent soil vapor concentrations assuming a standard 50 scfm extraction flow rate. Based on this estimate, the Purus PADRE® Model 1.6 can be operated for approximately the same cost as the ICE over the 1,000 ppmv to 4,250 ppmv concentration range. If the cost of providing a power hookup is greater than $1,000.00, or if a vapor extraction blower has not already been installed on the site, the ICE will provide a significant cost savings over the Purus PADRE® at all influent concentrations.

Because most sites that require SVE have initial soil vapor concentrations in excess of 10,000 ppmv, the ICE is the technology of choice for fuel spill site remediations. After soil vapor concentrations are reduced below 1,000 ppmv, many SVE systems can be switched to air injection bioventing systems. In summary, the Purus PADRE® Model 1.6 is a well-engineered system that can achieve 98+ percent removal of hydrocarbon vapors at loading rates of less than 36 kilograms per day. However, an ICE will generally be less expensive to operate over the concentration ranges encountered at fuel spill sites. The Purus PADRE® is best suited for the removal of chlorinated compounds which cannot be effectively treated using ICE technologies.

FIGURE 3.2
COST vs INFLUENT CONCENTRATION AT 50 SCFM
PURUS PADRE™ MODEL 1.6

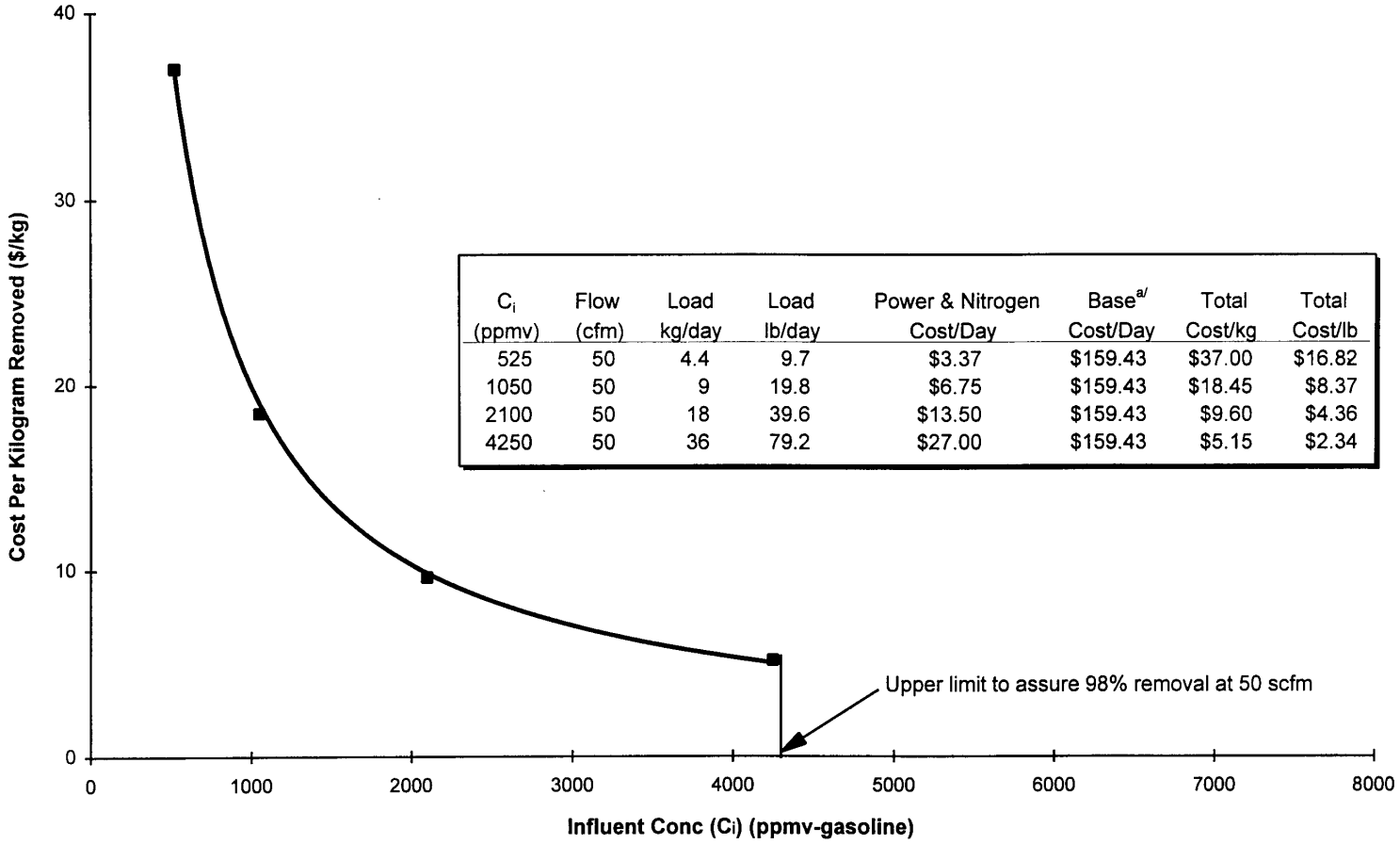

C_i (ppmv)	Flow (cfm)	Load kg/day	Load lb/day	Power & Nitrogen Cost/Day	Base[a/] Cost/Day	Total Cost/kg	Total Cost/lb
525	50	4.4	9.7	$3.37	$159.43	$37.00	$16.82
1050	50	9	19.8	$6.75	$159.43	$18.45	$8.37
2100	50	18	39.6	$13.50	$159.43	$9.60	$4.36
4250	50	36	79.2	$27.00	$159.43	$5.15	$2.34

[a/] Based on $3500/mo. rental, minimum 12 months and $40/day maintenance labor.
Does not include mobilization costs, but does include $1000 for power hookup.

TABLE 3.4
COST COMPARISON FOR VR SYSTEMS MODEL V2C, PURUS-PADRE® MODEL 1.6 AND GRANULAR ACTIVATED CARBON

Item		VR Systems Model V2C		Purus-Padre® Model 1.6		Granular Activated Carbon GAC	
Rental/Monthly [a/]		$3,115.00		$3,500.00		GAC cost based on purchase of 2,000 lb/canister @$2.13/lb.	
System Monitoring (Monthly)		$1,200.00		$1,200.00			
Power Hookup [f/] (Monthly)				$83.30			
Supplemental Fuel Costs:				• Requires Blower to Extract Soil Vapor		System monitoring $600.00 monthly or $20.00/day	
@ Constant Flow Rate of 50 SCFM						• Requires Blower to Extract Soil Vapor	
@ Various Loading Rates				Electrical and Nitrogen Supply Costs:			
PPMV	Kg/Day	Daily	Monthly	Daily	Monthly	• Based on a 20% Loading Capacity for Carbon	
525	4.4	$21.10	$633.00	$3.37	$101.00		
1,050	9	$20.85	$626.00	$6.75	$203.00		
2,100	18	$20.35	$611.00	$13.50	$405.00		
4,250	36[b/]	$19.25	$578.00	$27.00	$810.00		
Total Monthly Costs [c/e/]							
@ 4.4 kg/day		$4,948.00		$4,884.00			
@ 9 kg/day		$4,941.00		$4,986.00			
@ 18 kg/day		$4,926.00		$5,188.00			
@ 36 kg/day		$4,893.00		$5,593.00			
Cost per Kilogram Treated [d/]		Base Cost/Day	Cost/kg	Base Cost/Day	Cost/kg	Base Cost/Day	Cost/kg
@ 4.4 kg/day		$164.90	$37.48	$162.80	$37.00	$123.00	$27.95
@ 9 kg/day		$164.70	$18.30	$166.20	$18.45	$231.00	$25.70
@ 18 kg/day		$164.20	$9.10	$172.90	$9.60	$442.00	$24.60
@ 36 kg/day		$163.10	$4.50	$186.40	$5.15	$863.00	$24.00

a/ Based on a minimum rental period of 12 months.
b/ Maximum loading/day of 50 SCFM for the Purus model 1.6 to assure 98% removal.
c/ Based on a 30-day month, includes: system monitoring and supplemental fuel usage at various loading rates.
d/ Based on a 30-day month, at various loading rates.
e/ Does not include initial setup for either model.
f/ $1,000.00 initial electrical hookup for Purus-Padre® Model 1.6, divided by 12 months of operation.

FIGURE 3.3
COST COMPARISON FOR VR SYSTEMS V2C, PURUS-PADRE™ MODEL 1.6 AND GAC @ 50 SCFM

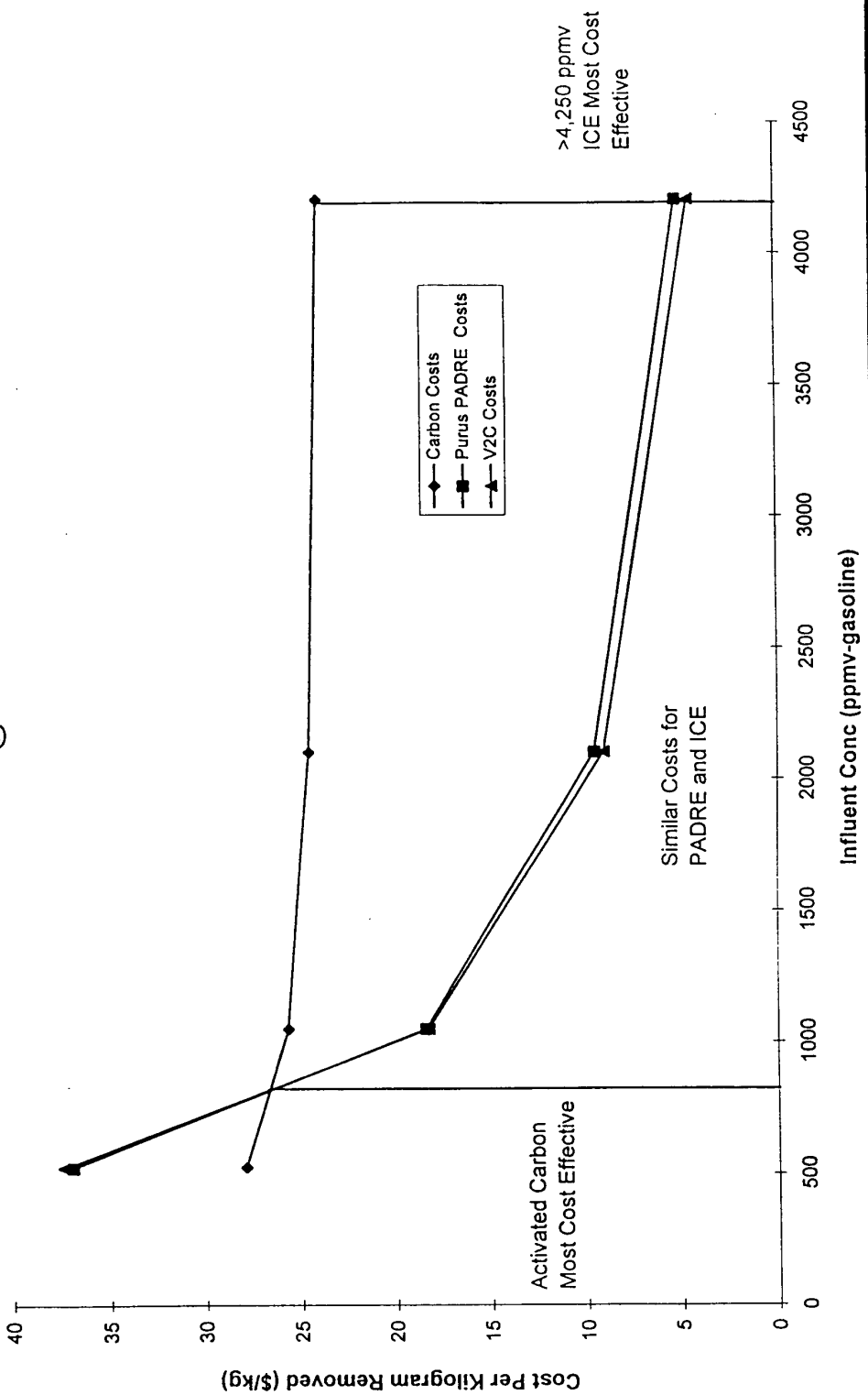

022/722406/6.WW6

3.4.4 Reliability and Maintainability

The Purus PADRE® system proved to be reliable during this study. During initial startup, approximately 3 weeks were required to correct mechanical problems and balance the system to flow conditions. However, after these startup problems were resolved, the unit operated with very few mechanical problems or interruptions for 110 days. The maintenance problems that did occur caused more downtime than would ordinarily be encountered because a telephone modem control system had not been installed with this unit. Had this telemetry been available, interruptions in service would have been detected instantly (via pagers), and often rectified via modem. Approximately 8 days of downtime occurred during the 94 days of operation following the initial 2-week startup period.

Regular monthly maintenance is required for the Purus PADRE® system. Because of the unit's complexity, specially trained Purus technicians are required for this maintenance. Liquid nitrogen supplies must be monitored and new dewars ordered in time to ensure uninterrupted operation. Nitrogen replacement and removal of recovered fuel can be completed by Base or contract personnel. A covered and properly vented storage tank must be located next to the unit to store recovered fuel and water. At this test site, a small carbon canister was required to treat hydrocarbons in the air vented from the tank. Before initiating treatment, the disposition of recovered fuel and water must be determined. The recovered hydrocarbons at this site could be recycled.

SECTION 4

SUMMARY

4.1 TECHNOLOGY PERFORMANCE

The Purus PADRE® system provided 110 days of vapor treatment and averaged over 98 percent removal of total VOCs and BTEX. During this pilot study, VOC influent concentrations decreased from 18,600 ppmv to 3,000 ppmv, and flow rates varied from 20 to 49 scfm. Approximately 570 gallons (3,500 pounds) of hydrocarbons were recovered from the site and recycled. The cost of Purus PADRE® treatment averaged $23 per kilogram ($10.45/lb) of hydrocarbon removed. Based on the operating costs observed during this test, the cost could be reduced to $5 to $6 per kilogram ($2.25 to $2.70/lb) if optimum loading was sustained and a 12-month rental agreement was in place. By varying the bed size and adsorption cycles, the Purus PADRE® unit can be optimized for different site conditions.

Startup of the Purus PADRE® system required 3 weeks of problem solving and system balancing. After the system was balanced, the Purus PADRE® operated with relatively few problems for 110 days. Installation of a telephone modem is recommended if the system is to operate for more than 60 days. System checks, recovered fuel handling, and nitrogen changes will require approximately 3 hours of technician time each week. Based on the relative complexity of this system, and the time and expense required for setup, the Purus PADRE® system will be most efficiently applied at sites where at least 90 days of treatment are required.

4.2 INTEGRATION WITH *IN SITU* BIOVENTING

At sites with high levels (>10,000 ppmv) of soil gas hydrocarbons, it may be necessary to extract these vapors before long-term air injection/bioventing can begin. Of particular concern are sites with gasoline or light distillate contamination, and sites near buildings and utility corridors that could be adversely impacted by vapor migration caused by air injection. Based on the cost evaluation presented in Section 3, it will generally be more economical to treat soil vapor concentrations of greater than 10,000 ppmv using ICE technology. However, there may be situations where thermal destruction is not desired due to regulatory or site contaminants.

Based on vendor information and testing at Vandenberg AFB, the Purus PADRE® technology is an effective method of controlling vapor emissions. The Model 1.6 is most efficient at a loading rate of 36 kilograms per day, which can be achieved by various combinations of flow and concentration. If 10 scfm is assumed to be the lowest practical vapor extraction rate, the maximum concentration that can be treated with the Model 1.6

(at 98 percent removal) is approximately 21,000 ppmv. If an *in situ* biofilter (reinjection trench) is used to treat breakthrough from the Purus PADRE®, higher concentrations could be accepted by the Purus PADRE® during the initial days of operation. Figure 4.1 provides an example of the flow rates and extracted hydrocarbon vapor concentrations that can be treated using the optimal Model 1.6 loading rate of 36 kilograms per day. Figure 4.1 can be used to determine if the minimum extraction rates required to provide oxygen for bioventing can be treated using the PURUS Model 1.6.

The amount of time that the Purus PADRE® should operate at each site will depend on several factors. The decision to begin air injection bioventing must be based on the potential risk of vapor migration and the ability of soil microorganisms to biodegrade vapor-phase hydrocarbons. Biodegradation rates established during the bioventing pilot tests can be used to determine the approximate mass of soil biofilter required to biodegrade a known mass of migrating hydrocarbons. By minimizing air injection rates to satisfy *in situ* oxygen demand, the flux of volatile hydrocarbons to the atmosphere will be minimized.

FIGURE 4.1
OPTIMUM INFLUENT CONCENTRATIONS vs. FLOW RATE
PURUS PADRE™ MODEL 1.6

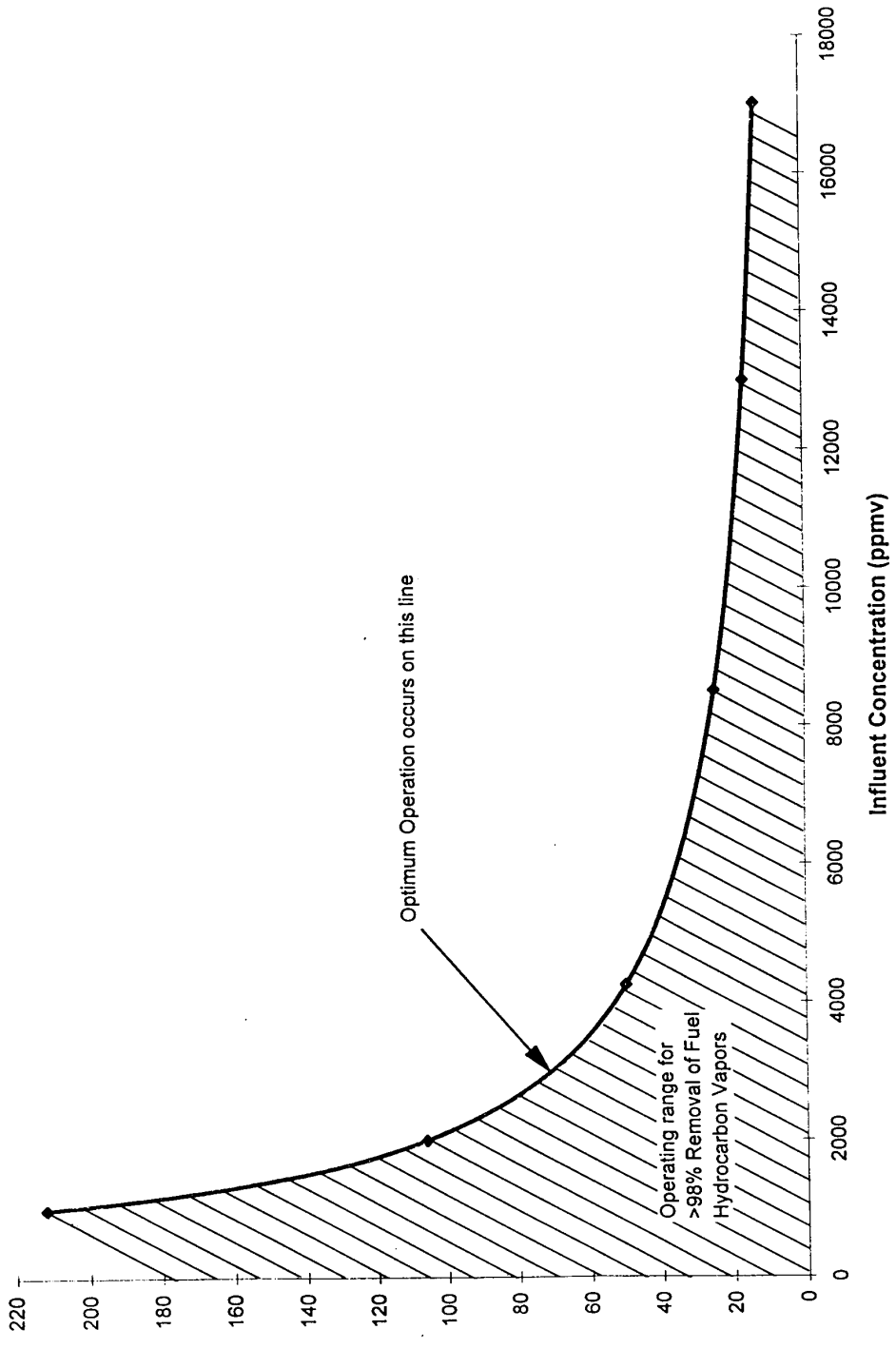

022/722406/6.WW6

SECTION 5

REFERENCES

Blystone, P.G., B. Mass, W.R. Haag. 1992. "VOC recovery from air streams using specialized adsorbents: a new economical recycling option." Proceedings of the Ind and Eng Chem Division Special Symposium on Emerging Technologies for Hazardous Waste Management, Vol. 1, American Chemical Society, Atlanta, GA.

Downey, D.C., C.J. Pulhar, L.A. Dudus, P.G. Blystone, R.N. Miller. 1994. "Remediation of Gasoline Contaminated Soils Using Regenerative Resin Vapor Treatment and In Situ Bioventing." Proceedings of API/NGWA Petroleum Hydrocarbons and Organic Chemicals in Ground Water Conference. Houston, TX. pp 239-254.

EPA, 1986. "Measurement of Gaseous Emission Rates from Land Surfaces Using an Emission Isolation Flux Chamber," EPA document # EPA/600/8-86/008.

Hinchee, R.E., S.K. Ong, R.N. Miller, D.C. Downey, R. Frendt. 1992. "Test Plan and Technical Protocol for a Field Treatability Test for Bioventing," prepared for the Air Force Center for Environmental Excellence, Brooks AFB, TX.

Archabal, S.R., Downey D.C. 1994. " A Performance and Cost Evaluation of Internal Combustion Engines for the Destruction of Hydrocarbon Vapors from Fuel-Contaminated Soils," prepared for the Air Force Center for Environmental Excellence, Brooks AFB, TX