Final
July 2, 1999

COST AND PERFORMANCE REPORT

On-Site Incineration
at Former Weldon Spring Ordnance Works, Operable Unit 1
St. Charles County, Missouri

July 1999

SITE INFORMATION

IDENTIFYING INFORMATION (1,2)

Site Name: Former Weldon Spring Ordnance Works (WSOW)
Location: St. Charles County, Missouri
Operable Unit: 1 (OU-1)
CERCLIS #: MO 5210021288
ROD Date: May 1996
Technology: On-Site Incineration
Type of Action: Remedial

Figure 1 shows the location of the WSOW in Missouri, and Figure 2 shows the site plan for OU-1 at the WSOW.

TECHNOLOGY APPLICATION (1,3,12,13)

Period of Operation:
Startup period (clean soil) – July 17 to July 28, 1998
Shakedown period (contaminated soil) – July 29 to August 13, 1998
Trial Burn – August 14, 15, and 16, 1998
Interim operation – August 17 to September 18, 1998
Full-scale operation – September 19, 1998 to April 1999

Quantity of Material Treated During Application:
30,000 tons of nitroaromatics-contaminated soil
85,230 linear feet of nitroaromatics-contaminated pipeline

In addition to the on-site incineration of contaminated soil and wooden pipeline, the selected remedy included on-site disposal of stabilized lead-contaminated soil, polychlorinated biphenyl (PCB) and polynuclear aromatic hydrocarbon (PAH)-contaminated soil, and asbestos-contaminated debris at the Department of Energy (DOE) disposal cell which is located at an adjoining National Priorities List (NPL) site. Groundwater at the WSOW is designated as a separate operable unit (OU-2) and is not addressed in this report.

BACKGROUND

Site Background and History (1,2,3,8):

- The former WSOW is located on approximately 17,232 acres, approximately 30 miles west of St. Louis in St. Charles County, Missouri. This facility was a nitroaromatics manufacturing plant operated by the Army during the 1940s, and included:
  - 18 trinitrotoluene (TNT) and two dinitrotoluene (DNT) production lines;
  - Three ammonia oxidation plants;
  - Four sulfuric acid and four nitric acid concentration plants;
  - Three wastewater treatment plants with incinerators to burn nitroaromatics-containing sludge;
  - An underground wooden pipeline for transport of nitroaromatics-containing wastewater to the treatment plants;
  - Analytical laboratories; and
  - Explosive burning areas.

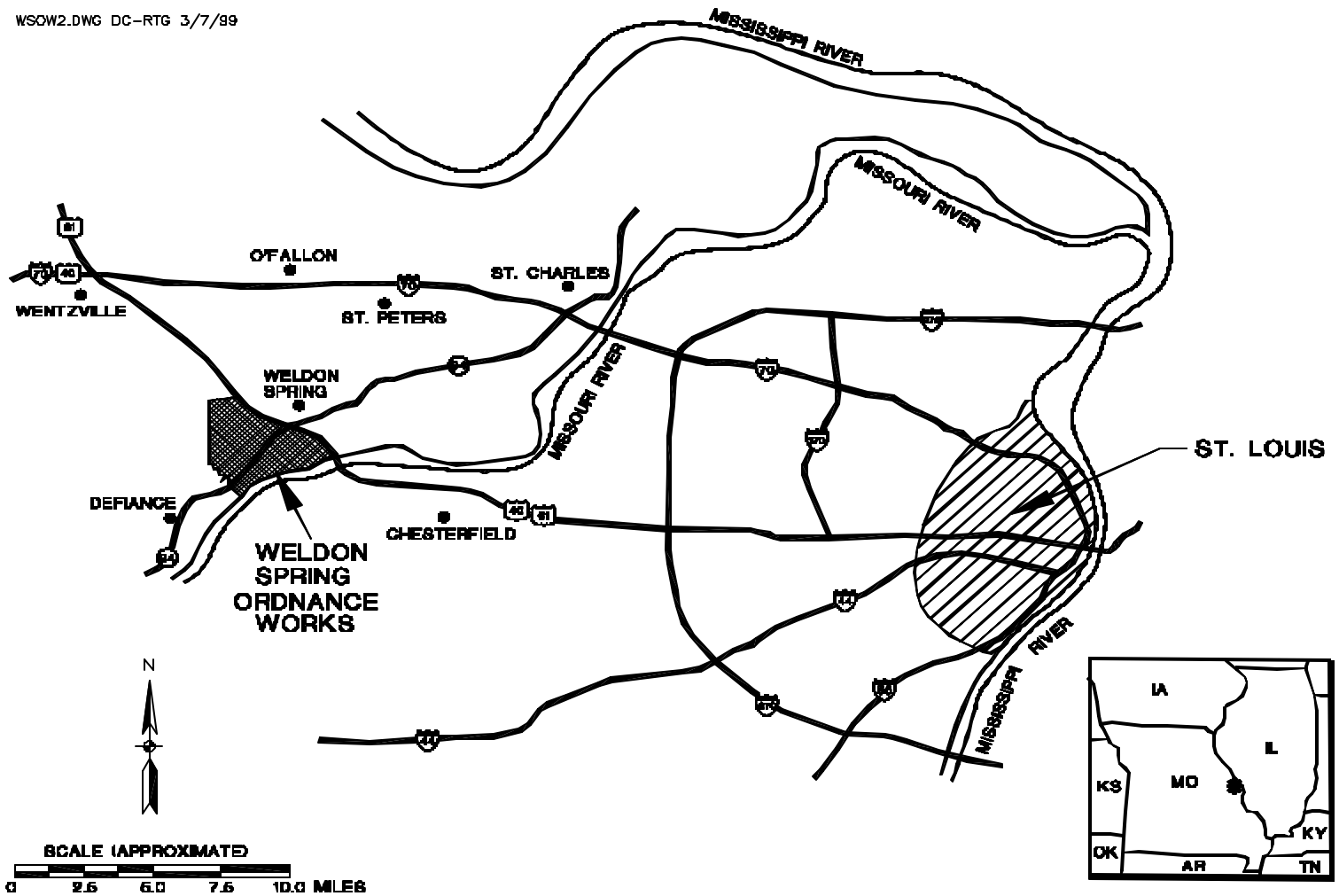

Figure 1. Location of the Former Weldon Spring Ordnance Works in Missouri

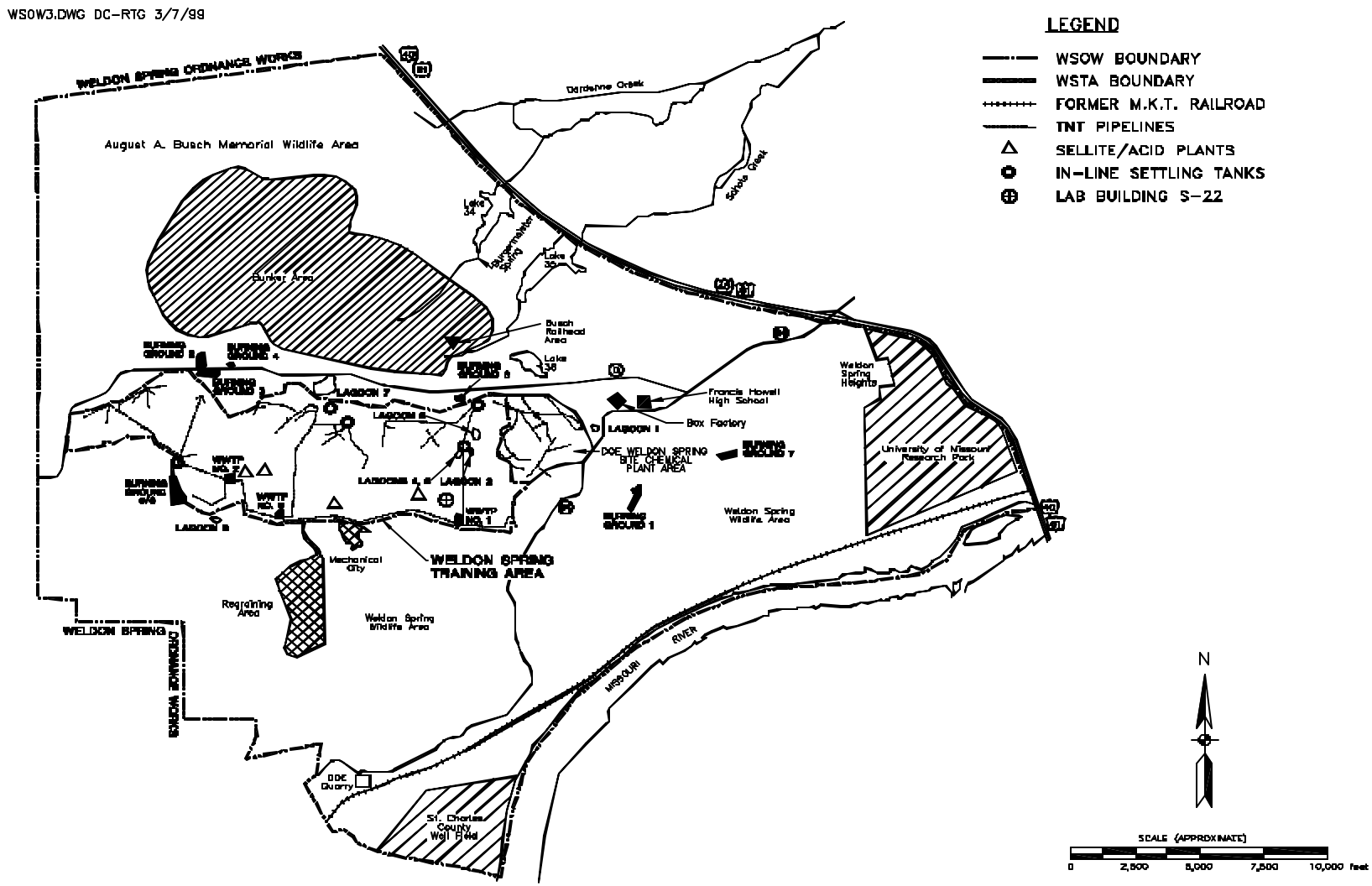

Figure 2. Site Plan for OU-1 at the Former WSOW

- The site was used to produce TNT and DNT explosives in crystalline powder form between 1941 and 1945. Purified TNT powder was shipped to off-site munitions plants for loading into shells or casings. The plant produced approximately 710 million pounds of TNT and 31.5 million pounds of DNT. By 1945, TNT was produced at a renovated facility in pellet form as a product improvement.

- The TNT and DNT manufacturing plants and supporting facilities were put on standby status between January and July 1944. Production resumed and continued until termination of operations was ordered in August 1945.

- By April 1946, the WSOW was declared a surplus property and in September 1946 the ownership was transferred from the Army to the War Assets Administration (now called the General Services Administration (GSA)). In 1949, the majority of the WSOW property was distributed to state and local jurisdictions, leaving only the Weldon Spring Training Area (WSTA) and the former Uranium Feed Material Plant site under federal ownership.

- The former WSOW property was divided into parcels and ownership was transferred to several agencies including the Missouri Department of Conservation, the University of Missouri, the Francis Howell School District, the St. Charles County Water Department, the Missouri Highway Department, and the DOE. The Army retained ownership of the WSTA.

- The WSTA covers approximately 1700 acres consisting of most of the former nitroaromatics production facilities. The WSTA is currently managed by Ft. Leonard Wood, and the clean areas of the site are actively used for Army Reserve training. The WSTA has been used in this capacity since 1959.

- The Uranium Feed Material Plant, also referred to as the Chemical Plant, is under DOE jurisdiction and is part of a separate NPL site.

SIC Code (13):

2892 (Production of Chemicals and Allied Products, including TNT and DNT)

Waste Management Practices that Contributed to Contamination (1,2,3,11):

Several areas within the WSOW were used for disposal of wastes and debris. These areas included three dumps, a landfill, eight burning grounds, and seven wastewater lagoons. Wash water and wastewater generated in the TNT and DNT production plants were discharged to settling lagoons at the WSOW prior to mid-1942 and to wastewater treatment plants via an underground wooden pipeline after mid-1942. Leaks and spills were reported to have occurred at the production buildings and at the wastewater pipeline. Open burning was used to dispose and/or treat off-specification material, surplus product and contaminated soil.

Early Cleanup Activities (1,2,4,13):

- Before the WSOW was added to the NPL, at least five cleanup operations were conducted to remove contaminants from the former nitroaromatics manufacturing areas. Several interim remedial actions have been conducted since then.

- The first cleanup was performed in 1944 when the plant was put on standby status. Remediation methods included washing equipment with soda ash solution, steam cleaning, flushing with water, excavation and removal of contaminated soil, and burning and controlled flashing of nitroaromatics and contaminated equipment.

- The second cleanup was conducted from August 1945 to August 1946, following termination of operations. Although little documentation was available, it is assumed that the cleanup methods were similar to the first cleanup, since the same contractor and personnel were used. Buildings were salvaged, destroyed by fire, or flashed with flame and scrapped. Approximately 200 of the 1,038 buildings at the WSOW were either burned or demolished by December 1946.

- The third cleanup included three separate efforts that took place in the 1950s. After assuming custody of the WSTA portion of the WSOW in 1950, GSA staff regraded the site, hauled excess soils from the production lines and removed scrap materials. The Army and the Atomic Energy Commission performed decontamination activities in 1955 prior to the transfer of 226 acres to the Atomic Energy Commission. These activities included removal of 28,250 cubic yards (CY) of contaminated soil and 21,500 linear feet of buried wastewater pipeline, burning of 59 buildings and razing of eight more structures. An additional 136 buildings were destroyed in 1956 and 1957 by burning, and 20 buildings were dismantled and/or sold in a cleanup effort called Cox's program. Cox's program was lead by the Army.

- During 1962 and 1963, the U.S. Army Support Center in St. Louis, in conjunction with the U.S. Army Corps of Engineers (USACE), conducted the fourth cleanup at the WSTA. Equipment was removed from 23 buildings and the buildings were demolished.

- A fifth cleanup was performed from 1965 to 1967. During this action, the wastewater incineration plants were dismantled and shipped to another TNT facility. Additional equipment, including transformers, utility poles, electrical and communications cables, was removed and 70 buildings were demolished.

Site Investigations (2,3,10):

- Several site assessments with limited scopes were conducted in the WSTA portion of the facility during the 1980s.

- The Army initiated a comprehensive remedial investigation (RI) of WSTA in 1988. In 1990 and 1991, a supplemental RI addressed the portion of the WSOW that is outside of the WSTA. These two RIs and supplemental investigations were used to identify the types, quantities, and locations of contaminants in different media at the WSOW.

- The USACE, Kansas City District, delineated areas requiring remediation in construction specifications finalized in June 1996.

- In September 1996, a Record of Decision (ROD) was signed for OU-1.

Remedy Selection (1,13):

The selected remedy included incineration of nitroaromatics-contaminated soil and wooden pipeline and soil co-contaminated with nitroaromatics and lead. The remedy also included stabilization of lead-contaminated soil followed by disposal at the DOE disposal cell. PCB- and PAH-contaminated soil and asbestos-contaminated materials (>1% asbestos) were also disposed of in the DOE cell. This remedy was selected to substantially reduce the risks associated with the contaminated materials that were present at the site.

Incineration and stabilization were selected for their ability to meet the following goals:

- To provide a permanent solution through destruction of nitroaromatics-contaminated materials;
- To use proven treatment technologies to the maximum extent practicable while providing the best balance of tradeoffs with respect to U.S. EPA's evaluation criteria; and
- To significantly reduce the toxicity, mobility, and volume of nitroaromatics present at the site (incineration) and reduce the mobility of lead contamination (stabilization and on-site disposal).

It was determined that the selected remedy would remove the remaining ordnance works-related contamination at the WSOW so that it could be adequately prepared for current and future land uses, which include wildlife management and military training. The incineration ash was used as fill material at the site and will not require any additional long-term management. The remedy also eliminated a source of nitroaromatics contamination in the groundwater at the site.

SITE LOGISTICS/CONTACTS (3,5,13)

Role	**Contact Information**
Lead Construction Engineer	Capt. Jim Workman USACE Big Piney Building 1018 P.O. Box 200 Ft. Leonard Wood, MO 65473 (314) 498-5176 james.j.workman@usace.army.mil
Project Manager	Mr. Dan Mroz USACE, Kansas City District 601 E. 12th Street USACE-MD-H Kansas City, MO 64106 (816) 983-3567 daniel.l.mroz@nwk02.usace.army.mil

Role	Contact Information
Regulatory Contacts	Mr. Tom Lorenz USEPA Region VII 726 Minnesota Avenue Kansas City, KS 66101 (913) 551-7292 lorenz.thomas@epamail.epa.gov Mr. Ray Strebler Missouri Department of Natural Resources Hazardous Waste Program, Division of Environmental Quality P.O. Box 176 Jefferson City, MO 65102-0176 (573) 751-7241
Remediation Contractor	Mr. Alan J. Zupko Roy F. Weston, Inc. 1 Weston Way West Chester, PA 19380-1499 (610) 701-3623

MATRIX AND CONTAMINANT DESCRIPTION

MATRIX IDENTIFICATION

Soil (ex situ) and Debris

SITE GEOLOGY/STRATIGRAPHY (4)

Much of the WSTA is underlain by a generally unsaturated overburden that is 0 to 60 feet thick. The overburden consists of deposits of a silty, organic-rich topsoil or fill, modified loess, glacial drift, and residuum of variable thickness.

Consolidated rocks immediately beneath the overburden consist of the Keokuk and Burlington Limestones of Lower Mississippian age. Detailed borehole data indicate that the upper part of these limestones is highly weathered, which results in an uneven bedrock surface.

Depths to groundwater range from approximately 10 to 43 feet below the land surface. Groundwater flow reflects the surface drainages, and groundwater beneath most production lines flows to the north towards Dardenne Creek. A groundwater divide between the Mississippi and Missouri Rivers trends nearly east-west across the southern part of the WSTA.

CONTAMINANT CHARACTERIZATION (3)

Primary Contaminant Group: Explosives/Propellants

Key Specific Contaminants: 2,4,6-TNT
2,4- and 2,6-DNT

CONTAMINANT PROPERTIES (6,7,8)

Table 1 lists selected properties for the key specific contaminants present at the former WSOW OU-1.

Table 1. Contaminant Properties

Property	Units	TNT	DNT
Chemical Formula	n/a	$C_7H_5N_3O_6$	$C_6H_3CH_3(NO_2)_2$
Molecular Weight	g/mole	227.13	182.13
Specific Gravity	n/a	1.654 (20°C)	1.521 (15°C)
Vapor Pressure	mm Hg	$1x10^{-6}$ (20°C)	$2.17x10^{-4}$ (25°C)
Boiling Point (@ atmospheric pressure)	°C	345	300 (slow decomposition)
Octanol-Water Partition Coefficient	log K_{ow}	1.65-2.83	1.88-2.77
Soil-Water Partition Coefficient	L/kg	3.8 (soil)	25.12

NATURE AND EXTENT OF THE CONTAMINANTS (1,2,3,10,11,13)

Nitroaromatics were detected in surface soil, shallow subsurface soil, groundwater and springs at the former WSOW. Potential sources of contamination include:

- Spills and leaks that occurred during production;
- Leaks from the wastewater pipeline;
- Use of settling lagoons as wastewater treatment prior to mid-1942;
- Disposal of off-specification material by open burning;
- Burning of contaminated soil and nitroaromatics during the 1940s; and
- Burning of the production buildings during the 1950s.

Table 2 summarizes the types and extent of contamination at the WSOW. The most prevalent contaminants at the WSOW are TNT, lead, and asbestos. DNT, PCBs, and PAHs were found in a few areas along with TNT-contaminated material and soil. Most of the contamination was found at the wastewater pipeline; Lagoons 1, 2, and 6; Wash and Grainer House foundation soil; Burning Ground 1; and the Old Lab Building (S-22).

Table 2. Types and Extent of Contamination

Area	TNT	Lead	Asbestos
Wooden Pipeline	X		
Wash House and Grainer Foundation Soil	X	X	
Lagoon 1, 2 and 6 Sediment	X		
Burning Ground 1			
Deep Fill Area (trash, debris)	X	X	X
Deep Fill Area (native soil)	X		
Southern Area	X	X	
Valley West	X		
Burning Grounds 2, 3 and 7 Soil	X		
Burning Grounds 5 and 6 Soil	X		X
Old Lab Building (S-22) and Soil	X	X	X
Wastewater Treatment Plants 1 and 2 Soil	X		
Acid Plants 2 and 4 Soil	X	X	
Secondary Settling Tank	X		
Sulfuric Acid Plant		X	
Production Areas Soil	X	X	
Bi-Tri Houses		X	
Sellite Plant		X	
Tramways Soil	X		
Mechanical City		X	

The U.S. Army has detected concentrations of TNT ranging from less than the detection limit (1 mg/kg) up to 510,632 mg/kg and up to 7,100 mg/kg and 200 mg/kg for 2,4-DNT and 2,6-DNT, respectively. In some areas, pure crystalline TNT was observed in soil at the site. Nitroaromatics concentrations decrease quickly with depth in shallow soils. DNT was found in surface soils and shallow subsurface soils much less frequently and at lower concentrations than TNT. Red-stained soils and stressed vegetation were common around former production buildings and transportation areas. About half of the sampling locations in the area of the wooden pipeline had a visible orange or red residue that contained TNT concentrations above 10,000 mg/kg.

Delineation efforts indicated that nitroaromatics contamination at the WSOW was present in small “pockets” that were rarely more than 30 feet in any horizontal direction or more than 3 feet deep. Excavation performed during remediation revealed that the actual extent of soil contamination, in most excavations, extended well beyond estimated depths and areas.

The quantities of material remediated by incineration were:

- 18,000 CY of nitroaromatics-contaminated soil, and
- 85,230 linear feet of wooden pipeline.

Excavation of TNT- and DNT-contaminated soil occurred in approximately 130 distinct areas. PAH, PCB, asbestos and/or lead-contaminated materials were placed in a temporary storage facility prior to final disposal in the DOE disposal cell.

MATRIX CHARACTERISTICS AFFECTING TREATMENT COST OR PERFORMANCE (9)

Table 3 lists selected characteristics of untreated feed material from the former WSOW.

Table 3. Matrix Characteristics

Characteristic	Value	Measurement Procedure
Soil Classification	Information not available	n/a
Clay Content and/or Particle Size Distribution	Information not available	n/a
Moisture Content	18% [a]	ASTM D-3178
Total Organic Carbon	1.2% [a,b]	ASTM D-5291
BTU Value	60 Btu/lb [a]	ASTM D-2015
Halogen Content	0.04% Chlorine [a]	ASTM E-776/EPA 300.0
Metal Content or Presence of Metals	Metals present at varying concentrations	SW 3050A/6010A, 7471A

[a] Average of data from the three runs of the trial burn.
[b] Total carbon was determined from the ultimate analysis, which may overestimate total organic carbon.

TREATMENT SYSTEM DESCRIPTION

PRIMARY TREATMENT TECHNOLOGY (2)

Soil Ex-Situ **– Incineration**

A mobile two-stage incineration system was used for this project, including the following:

- A primary incinerator chamber consisting of a rotary kiln, and
- A secondary combustion chamber (SCC) used as an afterburner.

SUPPLEMENTARY TREATMENT TECHNOLOGIES (2)

Pretreatment (Solids) – **Shredding**
Pretreatment (Solids) – **Screening**
Post-Treatment (Air) – **Cyclone**
Post-Treatment (Air) – **Quench**
Post-Treatment (Air) – **Baghouse**
Post-Treatment (Solids) – **Quench**
Post-Treatment (Solids) – **Stabilization** (only for treated soil and ash with lead concentrations in excess of the stabilization requirements)

TREATMENT SYSTEM SCHEMATIC AND TECHNOLOGY DESCRIPTION AND OPERATION

Figure 3 shows a process flow diagram for the incineration system used to treat ex-situ soil at the former WSOW.

Initial Activities (2,3)

Initial activities included:

- Clearing and grubbing operations;
- Connection of utilities;
- Construction of haul roads, a feed soil storage building, a water treatment plant, and a temporary storage facility for treated material;
- Preliminary excavation of the wooden pipeline and contaminated soil;
- Mobilization and setup of the incineration system;
- Startup and shakedown activities; and
- Conducting a pre-trial burn and a trial burn.

Incineration System Description and Operation (2,3,10,12,13)

The large-capacity Transportable Incineration System (TIS-20) is a stand-alone, mobile processing unit specifically designed to handle explosives-contaminated materials. The incinerator consists of four subsystems: the solids feed system, the combustion system (rotary kiln and SCC), the air pollution control system, and the treated material handling system. The soil is tumbled in the kiln while exposed to high temperatures and oxygen. Organic and nitroaromatic contaminants desorb from the soil and combust in the kiln. Any residual organic and nitroaromatic contaminants remaining in the kiln exhaust gas are further combusted in the SCC.

Pretreatment

Contaminated soil was excavated from previously designated areas and staged at the feed storage area. Excavation sampling was performed to confirm that the cleanup criteria were met in each area of excavation. The wooden pipeline was excavated and stored in the pipeline staging area prior to shredding. The pipeline was spiral-wrapped with steel banding and the shredder was designed to shred both the wood and the banding. Shredded pipeline was staged at the feed storage area.

Debris collected from each excavation was segregated into combustible and non-combustible debris. Combustible debris was shredded and staged in the feed storage area. Non-combustible debris was decontaminated and placed in the temporary storage facility.

Feed material was conditioned using standard disking and tilling equipment to achieve an acceptable consistency for transfer to the feed hopper. Feed conditioning also included blending and drying of the soil and reducing the size of any clumps of clay. All contaminated feed material passed through a screen that removed debris greater than two inches in diameter from the waste feed stream.

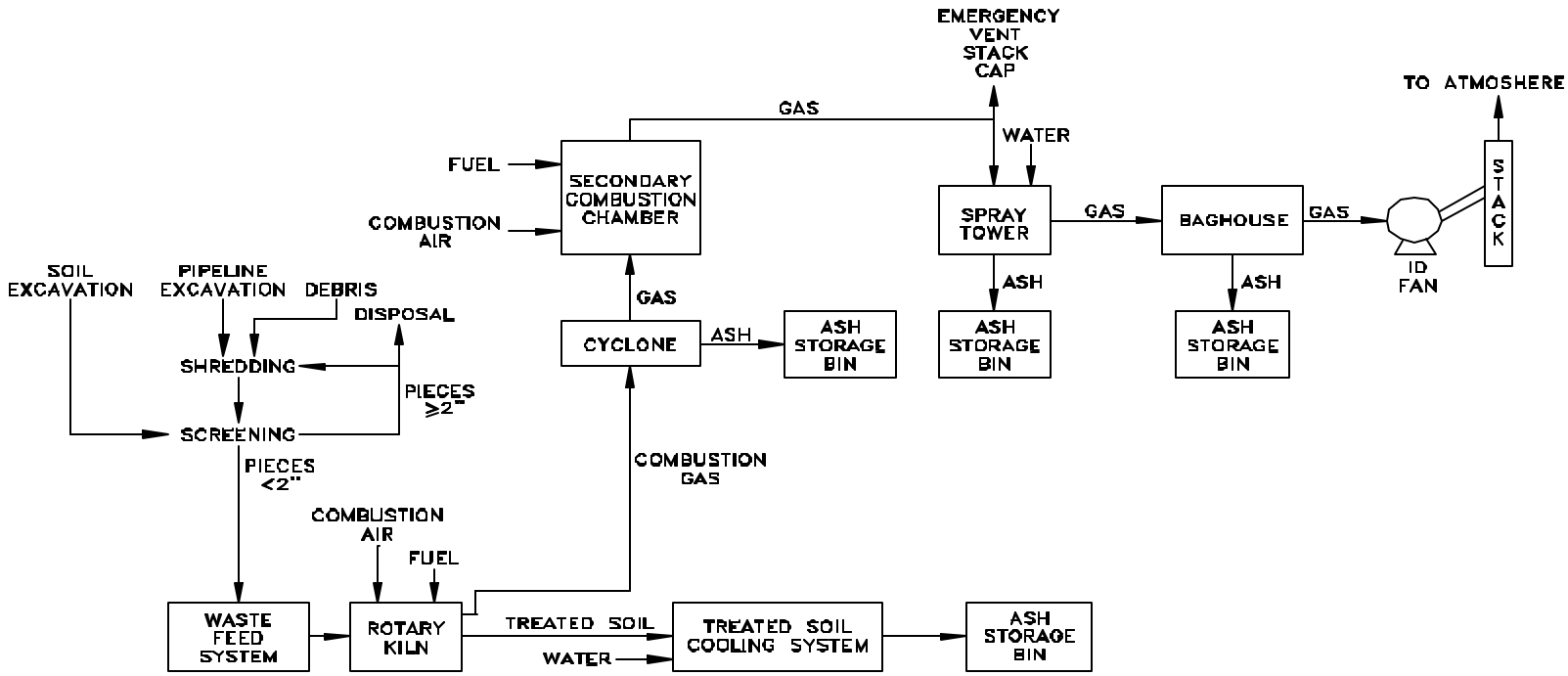

Figure 3. Process Flow Diagram of the Incinerator System

Waste Feed System

Feed material was added to the feed hopper by a front-end loader and fed to the incinerator through a series of conveyors. This hopper/conveyor system was designed to handle moist, clayey soils. The waste feed consisted of approximately 90% soil and 10% shredded wooden pipeline and banding.

Rotary Kiln

The rotary kiln co-currently fed propane and waste. The kiln was designed and operated to not only meet the treatment criteria, but also to prevent fugitive emissions, excessive volatilization of metals, dust carryover to the air pollution control system, and slagging in the kiln. The cylindrical rotary kiln had an inner diameter of approximately 10 feet and was 40 feet long.

The kiln was designed to process between 4 and 30 tons per hour (tph) of material with a maximum total heat release of 50 million Btu/hr. The nominal rotation speed of the kiln was 0.75 rotations per minute (rpm), with a maximum rotational speed of 1.0 rpm. The soil residence time in the kiln could be varied from approximately 15 minutes to greater than 60 minutes. A minimum operating gas temperature of 1626°F was maintained in the kiln.

The exhaust from the rotary kiln passed through a cyclone to remove larger particulates from the gas stream before entering the SCC. The collected solids were discharged to a fly ash container.

Secondary Combustion Chamber (SCC)

The function of the SCC was to thermally destroy any residual organic and nitroaromatic contaminants in the incoming gas stream to ensure compliance with the 99.99% destruction removal efficiency (DRE) requirement. The SCC was designed to provide a minimum of 2 seconds of gas retention time at maximum design flow. The SCC was operated with a minimum gas retention time of 3.01 seconds.

The SCC was 11 feet in diameter (inner diameter of 9.5 feet) by 80 feet in overall height. Propane was fired through two fuel burners with a combined rating of 52 million Btu/hr. A minimum operating gas temperature of approximately 1823°F was maintained in the SCC. The gases exiting the SCC entered the exhaust gas conditioning system (spray tower).

Air Pollution Control System

The two-stage spray tower was designed to quench the SCC exhaust gases rapidly to prevent dioxin formation and also to allow particulate and condensable metals to be collected efficiently in the baghouse. The quench cooled the SCC exhaust gas to below 450°F. Solids collected in the spray tower were discharged to a fly ash container.

The cooled gases exiting the spray tower were split to pass through two pulse-jet baghouses in parallel. This configuration allowed for on-line maintenance of one unit while the other was operational. The baghouses were designed to remove particulate and condensable metals from the gas stream. The gross filter air-to-cloth ratio was approximately 3.83:1. Solids collected in the baghouses were transferred to a fly ash container via screw conveyors.

Flue gases were pulled through the incinerator system and baghouses by a 500 horsepower induced draft (ID) fan and discharged from the exhaust stack. The stack was 100 feet tall with a 5-foot diameter. Probes for total hydrocarbons (THC), O_2, CO, and CO_2 continuous emission monitors (CEMs) were inserted into the stack.

Treated Materials (Ash) System

The Treated Materials System was designed to safely and efficiently cool and quench treated materials (bottom ash) discharged from the incinerator and avoid dusting and fugitive emissions. The system contained all treated materials until disposition was determined by chemical analysis. The system components are described below.

- Bottom ash from the rotary kiln was transferred to a storage bin with a wet-bottom drag chain conveyor, which cooled the bottom ash to approximately 125°F and increased the moisture content to 20% (by weight). The ash was stored in one of two watertight bins or containers. Bottom ash and fly ash were stored separately.

- The filled bins of bottom ash and fly ash were transported by front-end loaders to the Temporary Stockpile Area until their disposition was determined by comparison of chemical analysis results to the design treatment criteria. Ash that failed to meet the treatment criteria for explosives was retreated in the incinerator. Ash that met the treatment criteria for explosives was backfilled into the excavation sites. Ash that failed to meet the criteria for lead toxicity, as determined by the toxicity characteristic leaching procedure (TCLP), was stockpiled for stabilization.

Wastewater Treatment (2,3,10,12)

Wastewater from equipment and personnel decontamination activities and contaminated stormwater was collected and treated on-site in the aqueous waste treatment system (AWTS). Water from the AWTS was reused in the incinerator to cool combustion gases or to cool/condition ash and treated soil, or water was used for wetting/soaking pipeline materials at the shredder.

It was estimated prior to system start up that approximately 600,000 gallons of excess treated wastewater that could not be reused due to the completion of site activities would be hauled off site to a publicly-owned treatment works.

The AWTS had a treatment capacity of 50 gpm and consisted of the following treatment units:

- Contaminated water storage tanks;
- Filters in series for particulate removal (50, 10, 5, and 1-micron filters)
- Carbon absorption units in series;
- Treated water storage tanks.

Post-Operation (2)

When incineration operations were completed, the treatment system was shut down, decontaminated and dismantled for demobilization from the site. Backfilling and grading activities were performed as excavation was completed. All disturbed areas were seeded and restored as weather conditions permitted. All disturbed areas were restored to their original condition to the extent possible, including the rebuilding of damaged and/or removed access roads.

Personnel Requirements (12,13)

For normal operation of the incinerator, the following personnel were required per 12-hour shift:

- 1 control room operator;
- 4 to 5 mechanics/instrumentation technicians (one of which doubled as the AWTS operator);
- 4 to 5 heavy equipment operators in the feed preparation and feed storage areas; and
- 1 ash handler.

Health and Safety Requirements (2,10)

All Roy F. Weston and subcontractor personnel who performed work on-site complied with the training and medical surveillance requirements of OSHA 29 1910.120, OSHA 29 1926.65, the USACE Safety and Health Requirements Manual, EM-385-1-1, and the Site-Specific Health and Safety Plan. All project personnel attended site-specifiic and activity safety training. Equipment used in the treatment system was subject to an explosives safety review and approval process.

Modified Level D personal protective equipment (PPE) was required for excavation, incineration, and sampling activities. Modified Level D PPE included chemical resistant clothing and safety boot/shoes, inner and outer chemical resistant gloves, safety glasses, hard hat, and a 2-way radio. Exposure monitoring (air sampling) was conducted during intrusive field operations.

OPERATING PARAMETERS AFFECTING TREATMENT COST OR PERFORMANCE (2,9,12)

Table 4 lists operating limits for the incineration system. If system operations deviated from acceptable operating conditions for any parameters listed in Table 4, an automatic waste feed cutoff would be initiated.

Table 4. Operating Limits

Parameter	Limit
Maximum Kiln Waste Feed	21.1 tph HRA
Maximum Rotary Kiln Inlet Presure	0.0 inches w.c. instantaneous
Minimum Rotary Kiln Exit Gas Temperature	1,626°F HRA
Minimum SCC Exit Gas Temperature	1,823°F HRA
Minimum SCC Residence Time	3.01 seconds HRA
Maximum Air Flow Rate	53,000 acfm and 18,000 dscfm
Maximum Baghouse Inlet Temperature	449°F instantaneous
Minimum Baghouse Pressure Drop	3.0 inches w.c. instantaneous before waste feed initiated 4.75 inches w.c. within 1 hour of waste feed initiation
Maximum CO Emissions Concentration	100 ppm HRA (dry, corrected to 7% O_2)
Maximum THC Emissions Concentration	12 ppm HRA (corrected to 7% O_2)

tph – tons per hour
HRA – hourly rolling average
w.c. – water column

Table 5 lists design, allowable and actual values for parameters associated with operation of the incinerator system at the former WSOW OU-1. The parameters were selected for this report based on USACE guidance.

Table 5. Operating Parameters

Parameter	Design	Allowable[a]	Actual[b]
Air Flow Rate ID Fan	68,000 acfm (@ 168°F, 30 in. w.c.)	53,000 acfm (maximum)[c] 18,000 dscfm (maximum)[c]	Not Available
Residence Time Soils in Rotary Kiln Gas in SCC	 20 - 90 min 2 seconds	 N/A 3.01 seconds (minimum)	Not Available
System Throughput Waste Feed Rate	 25 tph	 21.1 tph (maximum)	Not Available
System Temperature: Gas Exit from Kiln Gas Exit from SCC	 600 – 2,200°F 1,800 – 3,000°F	 1,626°F (minimum) 1,823°F (minimum)	Not Available

acfm – actual cubic feet per minute
dscfm – dry standard cubic feet per minute
[a]Allowable values are the final operating limits and were derived from the trial burn results.
[b]Actual values are average conditions during remediation activities.
[c]Actual stack gas flow rates are not at the same temperature and pressure as the design flow rates and were not available for this report.

TIMELINE (2,3,9,11,13)

Date	Activity
February 21, 1990	WSOW added to the NPL
August 8, 1990	Interagency agreement signed among the U.S. EPA, the Army, and MDNR
December 1, 1993 – Feb. 14, 1994	Public comment period on the preferred remedy for former WSOW OU-1
December 14, 1993	Public meeting on the preferred remedy
September 26, 1996	U.S. EPA signed the ROD for former WSOW OU-1
May 16, 1997	Roy F. Weston awarded construction contract for remedial action
June 11, 1997	Roy F. Weston issued notice to proceed
December 15, 1997	Mobilize to the site
January 28 – July 16, 1998	Set-up of incineration system
February 2 – April 10, 1998	Construct feed storage area
February 13 – April 2, 1998	Construct shredding facility
March 3 – 27, 1998	Construct ash handling area
March 16, 1998 – February 1999	Pipeline clearing, excavation and backfill
April 9 – July 10, 1998	Construct feed preparation building
April 9 – July 20, 1998	Construct temporary storage facilities
April 14 – 28, 1998	Construct wastewater treatment system
May 28 – June 20, 1998	Construct permanent decontamination pad
June 11, 1998 – April 9, 1999	General excavation and backfill
July 17 – August 13, 1998	Setup complete; start up and shake-down of incinerator system
August 5, 1998	Pre-trial burn

Date	Activity
August 14 - 16, 1998	Trial burn
August 17 – September 18, 1998	Interim operation of treatment system
September 19, 1998 – April 1999	Full-scale operation of treatment system
1999	Incinerator decontamination and demobilization
April 29 – June 3, 1999	Stabilization of lead contaminated soil and incinerator fly ash
August 1998 – July 1999	Site restoration

TREATMENT SYSTEM PERFORMANCE

PERFORMANCE OBJECTIVES (2,3,10,12,13)

- Areas delineated by USACE for remediation were excavated to the pre-determined design boundaries at which point verification samples were collected. If the verification sample results exceeded the excavation action levels in Table 6, additional soil was excavated until boundary verification sample results were below action levels. Excavated soils were subsequently treated or disposed, as appropriate. Table 6 also provides the treatment requirements for incineration of explosives-contaminated soil and pipeline material, requirements for lead stabilized soil and ash before being landfilled, and publicly owned treatment works (POTW) discharge criteria for the AWTS.

Table 6. Summary of Performance Objectives

Constituent	Excavation Action Levels	Incineration Requirements	Stabilization Requirements	AWTS POTW Discharge Criteria
TNT	57 ppm (dry wt)	57 ppm (dry wt)	N/A	2 µg/L
2,4 and 2,6-DNT	2.5 ppm (dry wt)	2.5 ppm (dry wt)	N/A	2 µg/L
Lead	500 ppm (dry wt)	N/A	5 mg/L (by TCLP)	0.4 mg/L
Total PCBs	10 ppm (dry wt)	N/A	N/A	N/A
PAHs	10 ppm (dry wt)	N/A	N/A	N/A
pH	N/A	N/A	N/A	6 – 9

N/A – Not Applicable

- Excavation action levels for TNT, DNT, and PAHs were established based on the Baseline Risk Assessment for the WSOW. The lead action level was based on EPA Interim Guidance on Establishing Soil Lead Cleanup Levels for Superfund Sites. The PCB criterion was based on the EPA PCB Spill Cleanup Policy.

- Not all of the soil excavated was treated in the incinerator. Excavated soil containing PCBs and/or PAHs, and materials with asbestos concentrations exceeding 1% were disposed in the DOE disposal cell without undergoing incineration. If encountered, soil with PCB concentrations exceeding 50 ppm required off-site disposal due to more stringent disposal requirements. Soil with only lead contamination was stabilized and placed in the disposal cell. Lead-contaminated soil and ash were only stabilized if sample results exceeded the stabilization requirements.

- The following table provides the performance standards for the incinerator at the former WSOW OU-1.

Table 7. Performance Standards

Parameter	Performance Criteria	Basis
DRE for POHCs	>99.99%	40 CFR 264 and 266
SCC Residence Time	>2 seconds	Good Engineering Practice
Stack Gas Opacity	<10%	
Metal Emissions		Agreement between USACE and MDNR/EPA; emissions determined to be safe by the Combustion Risk Assessment
Antimony	4.23E-4 grams/sec	
Arsenic	7.60E-4 grams/sec	
Barium	2.69E-2 grams/sec	
Beryllium	1.12E-4 grams/sec	
Cadmium	1.90E-4 grams/sec	
Chromium (III)	1.09E-3 grams/sec	
Chromium (VI)	1.56E-4 grams/sec	
Lead	1.28E-1 grams/sec	
Mercury	6.64E-4 grams/sec	
Nickel	1.76E-3 grams/sec	
Selenium	7.70E-4 grams/sec	
Silver	1.36E-4 grams/sec	
Thallium	1.75E-3 grams/sec	
Mercury Emissions	<50 µg/dscm @ 7% O_2	Agreement between USACE and MDNR (based on proposed MACT standards)
2,3,7,8 –TCDD TEQ Emissions	<0.2 ng/dscm @ 7% O_2	
Hydrochloric Acid (HCl) and Chlorine (Cl_2) Emissions	<67 ppm_{dv}	
Particulate Matter (PM) Emissions	<0.03 grains/dscf @ 7% O_2	
Carbon Monoxide (CO) Emissions	<100 ppm_{dv} HRA @ 7% O_2	
Total Hydrocarbon (THC) Emissions	<12 ppm_v HRA @ 7% O_2	
Nitrous Oxides (NO_x) Emissions	<150 ppm_{dv}	Agreement between USACE and MDNR (based on NAAQS)

DRE for POHCs – Destruction and Removal Efficiency for Principal Organic Hazardous Constituents
TCDD TEQ – Tetrachlorinated dibenzo-p-dioxin Toxic Equivalents Quotient
ng/dscm – nanograms/dry standard cubic meter

TREATMENT PLAN (2,3,9,13)

Following setup, incinerator startup operations were conducted on clean soil from July 17 to 28, 1998. Shakedown operations were conducted on contaminated soil from July 29 to August 13, 1998. A pre-trial burn consisting of one run was conducted on August 5, 1998. TNT- and DNT-contaminated site soil and shredded pipeline spiked with lead oxide and naphthalene (POHC) were used for the test. Since soil TNT concentrations were insufficient to demonstrate 99.99% DRE of POHCs, naphthalene was spiked as a surrogate at a rate sufficient to prove 99.99% DRE. According to the pre-trial burn results, the incinerator could achieve all of the performance standards.

Based on the successful results of the pre-trial burn, the trial burn was conducted from August 14 to 16, 1998. The trial burn was conducted to determine the incinerator operating limits, which are based on the actual trial burn operating conditions that were demonstrated while complying with the performance standards. The waste feed was TNT- and DNT-contaminated soil and shredded pipeline spiked with lead oxide and naphthalene. The three test runs confirmed that the incinerator system could meet the performance standards. The following table summarizes the results of the trial burn.

Table 8. Trial Burn Results (9)

Parameter	Units	Performance Standard	Run 1	Run 2	Run 3
DRE for POHCs	%	>99.99	99.999963	99.999973	99.999973
SCC Residence Time	seconds	>2	2.93 – 3.18	3.01 – 3.19	3.10 – 3.26
Stack Gas Opacity	%	<10	0	0	0
Metal Emissions					
Antimony	grams/sec	4.23E-4	2.63E-5	2.98E-5	5.16E-5
Arsenic	grams/sec	7.60E-4	4.40E-6	5.52E-6	8.27E-6
Barium	grams/sec	2.69E-2	1.45E-4	2.38E-4	1.21E-4
Beryllium	grams/sec	1.12E-4	≤8.68E-7	≤8.42E-7	≤8.59E-7
Cadmium	grams/sec	1.90E-4	≤8.64E-7	≤8.42E-7	≤8.59E-7
Chromium (III)	grams/sec	1.09E-3	5.19E-5	8.51E-5	1.14E-4
Chromium (VI)	grams/sec	1.56E-4	≤8.38E-7	≤8.44E-7	≤8.27E-7
Lead	grams/sec	1.28E-1	2.14E-3	2.56E-3	1.91E-3
Mercury	grams/sec	6.64E-4	1.34E-4	1.28E-4	1.66E-4
Nickel	grams/sec	1.76E-3	4.54E-5	4.80E-5	6.58E-5
Selenium	grams/sec	7.70E-4	3.21E-5	3.26E-5	5.24E-5
Silver	grams/sec	1.36E-4	≤1.74E-6	≤8.42E-7	7.68E-6
Thallium	grams/sec	1.75E-3	≤2.61E-6	≤2.52E-6	≤2.57E-6
Mercury Emissions	µg/dscm @ 7% O_2	<50	16.86	15.95	20.61
2,3,7,8 –TCDD TEQ	ng/dscm @ 7% O_2	<0.2	0.0509	0.0411	0.0290
HCl/Cl_2 Emissions	ppm_{dv}	<67	3.62 (HCl) 0.01 (Cl_2)	3.74 (HCl) ≤0.02 (Cl_2)	2.97 (HCl) ≤0.03 (Cl_2)
PM Emissions	grains/dscf @ 7% O_2	<0.03	0.0086	0.0069	0.0085
CO Emissions	ppm_{dv} HRA @ 7% O_2	<100	0.43	0.46	0.39
THC Emissions	ppm_v HRA @ 7% O_2	<12	0.06	0.09	0.05
NO_x Emissions	ppm_{dv}	<150	44.8	42.2	41.7

Table 9 lists the operating parameters during the various trial burn runs.

Table 9. Trial Burn Process Operating Parameters (9)

Parameter	Units	Run 1	Run 2	Run 3
Waste Feed Rate	tph	19.96 – 20.82	19.50 – 21.78	20.20 – 20.78
System Draft	in. w.c.	-0.23 – -0.09	-0.21 – -0.08	-0.25 – -0.09
Kiln Exit Temp	°F	1615 – 1679	1635 – 1674	1628 – 1652
SCC Exit Temp	°F	1823 – 1840	1820 – 1843	1828 – 1851
Baghouse Inlet Temp	°F	400 – 423 (BH1) 389 – 413 (BH2)	401 – 436 (BH1) 390 – 423 (BH2)	399 – 420 (BH1) 390 – 412 (BH2)
Baghouse Pressure Drop	in. w.c.	5.64 – 6.48 (BH1) 5.92 – 6.58 (BH2)	5.25 – 6.48 (BH1) 5.89 – 6.51 (BH2)	4.75 – 6.49 (BH1) 5.80 – 6.47 (BH2)

TREATMENT PERFORMANCE DATA (13)

Table 10 summarizes selected results from TNT and DNT analyses performed on treated soil and fly ash. None of the treatment criteria were exceeded in any of the treated soil or fly ash samples.

Table 10. Summary of Selected Results from Treated Soil Analyses

Contaminant	EPA Test Method	Number of Samples	Number of Results Above the Detection Limit	Concentration Range (mg/kg)	Treatment Criteria (mg/kg)
TNT	8330	430	148	≤0.05 to 11.9	57
2,4-DNT		33	5	≤0.05 to 0.1	2.5
2,6-DNT		33	0	≤0.05	2.5

PERFORMANCE DATA ASSESSMENT (9)

- The pre-trial burn and trial burn results demonstrated that the incinerator satisfied all performance standards established for the WSOW project. In most cases, results were at least one order of magnitude better than the established standards.
- The metal emission rates were considerably lower than the emissions determined to be acceptable in the Combustion Risk Assessment.
- No explosives were present in the stack gas above detection limits during any of the trial burn test runs.
- The incinerator met the treatment criteria for treated soil and pipeline during interim and full-scale operations.

PERFORMANCE DATA QUALITY (2,9,10,12)

The pre-trial burn and trial burn were conducted in accordance with the procedures described in the Trial Burn Plan and the Quality Assurance Project Plan for the trial burn. These documents discuss sampling and analytical procedures, along with specified calibration requirements, quality control checks, and sample tracking.

A detailed Contractor Quality Control Plan was prepared as part of the quality control system for the remediation project. A daily quality control report was completed, signed and dated by the contractor quality control system manager verifying that the equipment and materials incorporated in the work and that the workmanship complied with contract specifications.

Soil/Pipeline Sampling

Soil samples were collected from excavation bottoms and sidewalls. Results from the soil samples were used to determine if additional excavation was necessary in each area.

An independent, off-site laboratory analyzed samples of treated soil and collected flyash in order to determine if the remediation goals were being met. Samples of treated soil were collected every four hours and composited for daily analysis for TNT. A grab sample was collected from each flyash bin when

it was full. Flyash and treated soil samples were also analyzed for TCLP lead when lead-contaminated soil was treated. In addition, six samples were collected weekly for analysis of isotopic radium, uranium, and thorium. The six samples included four grab samples of feed material, one grab sample of treated material, and one fly ash sample composited from grabs from the individual fly ash bins. Results from the treated soil samples were used to determine if treated soil could be returned to the site as fill material.

Continuous Emission Monitors

Single-point zero and span calibration checks were performed automatically by the CEM system every day. If the span or zero were outside of the specifications, the operator would do a manual calibration check and a manual recalibration, if necessary. Daily inspections of the sample conditioning system included a visual examination of the sample line and its temperature controllers, the sample vacuum line, the conditioning system flow rates, and the individual analyzer pressures and flow rates.

There were two sets of analyzers: one for primary monitoring, and the other for backup and redundancy. This ensured that the emissions would be continuously monitored even during daily calibrations.

A Performance Specification Test (PST) was conducted on the CEM system used at the incinerator stack prior to conducting the pre-trial burn and trial burn. The PST included an evaluation of calibration drift, calibration error, response time, and relative accuracy.

Stack Testing

For the trial burn, no problems with sample custody, tracking, or preservation were noted, with one exception. The mass of metal in the site blank was higher (for some metals) than the mass of metals in the actual sample. It was suspected that the laboratory may have switched samples or combined samples prior to digestion for Run 3 of the metals train. For Run 3, the emissions reported represent the combination of the actual Run 3 sample and the site blank.

TREATMENT COST

PROCUREMENT PROCESS (3,12,13)

A two-step sealed bidding process was used to solicit proposals. Bids from contractors were submitted as two separate documents: a technical proposal and a cost proposal. The technical proposal provided for an evaluation of the bidder's technical expertise, experience and overall technical approach for complying with the contract specifications. Each cost proposal was evaluated based strictly upon cost. The "best value" proposal was selected with value being based upon both cost and technical merit.

Roy F. Weston, Inc. was awarded a firm-fixed price contract for complete site remediation activities at Former WSOW OU-1. The contract for cleanup of OU-1 was awarded for $13,665,997 and included incineration of nitroaromatics-contaminated soil and pipeline, stabilization of lead-contaminated soil, and disposal of soil contaminated by asbestos, PCBs and PAHs.

The bid unit cost for incineration-related capital and O&M costs at OU-1 was not available for this report. The contract bid quantity for this project was 30,000 tons of nitroaromatics-contaminated soil and 85,230 linear feet of wastewater pipeline. The quantity of pipeline to be treated was converted from linear feet to tons assuming that one linear foot weighed approximately 25 pounds and that after shredding the pipeline density was 0.43 tons per CY.

The following list of companies were the major subcontractors used by Roy F. Weston to complete this project:

Subcontractor	**Tasks**
American Technical & Analytical Services	Sample Analysis
Amerigas – PA	Propane Supplier
Concrete Forming	TTU concrete forming
Unnerstall Contracting Co.	TTU site grading

TREATMENT SYSTEM COST (12)

The actual unit cost for incineration-related capital and O&M costs at OU-1 was not available for this report. The total amount of treated soil and shredded pipeline was not available for this report. Table 11 presents all incineration-related costs.

COST SENSITIVITIES (12)

Changes in the length of pipeline or volume of soil to be treated would cause the project cost to change significantly. Increases in the treatment quantities would increase costs due to additional excavation, shredding, TTU operation, and ash management. Excavation of pipeline is significantly more expensive than excavation of soil when evaluated in consistent units (dollars per CY).

USACE does not believe that contract costs would have been lower had a different procurement process been used. The process provided the Source Selection Authority flexibility to take into account both cost and technical merits in the selection of an overall “best value” proposal package.

Table 11. Actual Incineration-Specific Costs at Former WSOW OU-1

Cost Categories	Cost Elements	Element Cost ($)	Category Cost ($)
Capital Costs	Project Management		
	Mobilization, Setup, and Demobilization Mobilization Costs Site Survey Decontamination and Demobilization		
	Planning and Preparation Insurance, Bonding, Permits Engineering Documentation (e.g., test plans) Combustion Risk Assessment Regulatory Interaction		
	Site Work Clearing and Grubbing Road Work Site Security, Install/Maintain Fences and Gates Site Drainage Site Restoration		

Cost Categories	Cost Elements	Element Cost ($)	Category Cost ($)
	Equipment and Appurtenances Feed Preparation Building Temporary Storage Facility Feed Storage Area Shredder Facility Ash Handling Area Wastewater Treatment System Thermal Treatment Unit (TTU) Permanent Decontamination Pad Project Signage		
	Startup and Testing TTU Pretest, Trial Burn, and PIC Test		
		Subtotal:	
Operation & Maintenance (Shredder and TTU)	Project Management		
	Labor		
	Materials		
	Utilities and Fuel		
	Equipment rental/lease		
	Performance Testing and Analysis		
	Other Hot Standby Cold Standby – Short-Term Cold Standby – Long-Term		
		Subtotal:	
Other Related Costs	Compliance Testing and Analysis Untreated Soil/Excavations Treated Soil/Fly Ash Air Monitoring		
	Soil, Pipeline & Debris Excavation, Collection & Control Wastewater Pipeline Excavation Nitroaromatics-Contaminated Soil Excavation and Transport Surface Debris Collection and Sorting		
	Disposal of Residues Ash Management		
	Other Wastewater Treatment Public Relations Efforts		
		Subtotal:	
	TOTAL		

REGULATORY/INSTITUTIONAL ISSUES

Because this project was performed under CERCLA regulations, it was not necessary to obtain permits from local regulatory authorities for on-site activities. It was necessary, however, to meet the substantive requirements of potentially applicable regulations. The following permitting, approval and public relations issues were encountered on this project (1,3,12):

- A public comment period for this remedial action lasted from December 1, 1993 to February 14, 1994. A public meeting was held on December 14, 1993 to present the Proposed Plan for the remedial action and solicit comments.

- The US EPA Region VII administrator signed the ROD on September 26, 1996.

- Permit equivalents were required for:
  - Initial operation of the incinerator,
  - Hazardous waste generation,
  - Stormwater discharge;
  - Asbestos abatement, and
  - Highway crossing.

- All contractor operating procedures and methods for performance of the cleanup were required to be approved by the regulatory agencies.

- A public meeting was held on September 28, 1998 to present the trial burn results.

- A combustion risk assessment was prepared for the incineration of soils and pipeline at the site. The results from the risk assessment were critical to obtaining "permit approval" for remediation activities by the regulators. Permission for full-scale operation of the incinerator was obtained from MDNR and U.S. EPA on September 18, 1998, when they approved the trial burn report.

- Regulatory approval was required prior to proceeding with various phases of the work in areas where radioactive materials have potentially been present.

- The site is not expected to have any limitations on future use since the soil was treated to residential standards.

OBSERVATIONS AND LESSONS LEARNED

COST OBSERVATIONS AND LESSONS LEARNED (3,5,13)

The incinerator was not capable of achieving the allowable maximum throughput due to increased maintenance costs at higher throughput. The incinerator was operated up to 80% of the allowable throughput.

In addition to the incinerator costs provided above, the following intangible costs were incurred related to:

- The preliminary "permitting" process for the incinerator and work that occurred after the notice-to-proceed was issued to the contractor;

- The combustion risk assessment that was critical in obtaining "permit approval" from the regulators;
- Public outreach efforts, especially the public relations firm that was under contract to provide community relations support (meetings, flyers, web pages, newsletters, and newspaper advertisements);
- Delays caused by regulatory direction;
- The discovery of ultra low level radioactivity in the feed soils and the resulting downtime, delays and additional work on the part of USACE and the contractor.

PERFORMANCE OBSERVATIONS AND LESSONS LEARNED (5)

Due to the silty soils being treated, accumulation of particulates beneath the secondary combustion burner was higher than expected. This required an increase in maintenance-related shutdowns of the incinerator to allow manual removal of the accumulated particulate. A longer shakedown period may have allowed this problem to manifest itself and provided an opportunity to make necessary modifications before proceeding to the pre-trial burn and trial burn testing.

During the period after the trial burn and before approval of full-scale operations, MDNR imposed additional operating restrictions on the incinerator than those specified in the Trial Burn Plan. This resulted in less efficient operation of the unit during the interim operating period.

OTHER OBSERVATIONS AND LESSONS LEARNED

Completing excavation of contaminated soil has been delayed for several reasons. The amount of soil to be excavated was significantly larger than expected. In addition, turnaround times for TNT soil screening analyses were slow and no contingency was in place to increase the resources at the laboratory.

REFERENCES

1) Record of Decision, Remedial Action at WSOW OU-1, Weldon Spring Ordnance Works, St. Charles County, Missouri, USEPA Region VII and USACE Kansas City District, May 1996.

2) Final Trial Burn Plan, Former Weldon Spring Ordnance Works, Operable Unit 1, Soils and Pipeline Remedial Action, Roy F. Weston, July 1998.

3) US Army Corps of Engineers - Weldon Spring Ordnance Works web site, http://www.mrk.usace.army.mil/weldon/weldon.html.

4) Schumacher, John G., Lindley, Chris E., and Anderson, Forrest S., “Migration of Nitroaromatic Compounds in Unsaturated Soil at the Abandoned Weldon Spring Ordnance Works, St. Charles County, Missouri”, Proceedings from the 16th Annual Environmental Research and Development Symposium, June 1992.

5) Letter – from Michael Pantaloni of Roy F. Weston to Robert Kreienheder of USACE, dated September 15, 1998, Re: Former Weldon Spring Ordnance Works, TIS Operational Data.

6) Verschueren, Karel (editor), Handbook of Environmental Data on Organic Chemicals, Second Edition, 1983.

7) Perry, Robert H. (editor), Perry's Chemical Engineers' Handbook, Sixth Edition, 1984.

8) Kaye, Seymore M., Encyclopedia of Explosives and Related Items, PATR 2700, Volume 9, U.S. Army Armament Research and Development Command, Dover, NJ, 1980.

9) Trial Burn Summary Report, Former Weldon Spring Ordnance Works Operable Unit 1, Soils and Pipeline Remedial Action, Roy F. Weston, September 1998.

10) Construction Specifications, Operable Unit 1, Soils and Pipeline, Former Weldon Spring Ordnance Works, 100% Review, IT Corporation, June 1996.

11) Final Predesign Investigations Report, Former Weldon Spring Ordnance Works, IT Corporation, July 14, 1995.

12) Response to December 21, 1998 memorandum of questions regarding OU-1 provided by USACE, Kansas City District, received January 22, 1998.

13) Comments on the Pre-Draft provided by USACE, Kansas City District, dated March 8, 1999.

ACKNOWLEDGEMENTS

This report was prepared for the U.S. Army Corps of Engineers under USACE Contract No. DACA45-96-D-0016, Delivery Order No. 12.